aiwa SERVICE

CSD-TD31 HR(S,L) EZ(S) HA(S)

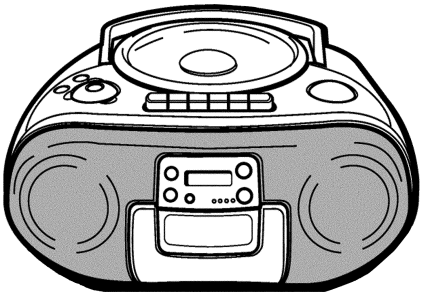

SERVICE MANUAL

COMPACT DISC STEREO RADIO
CASSETTE RECORDER

BASIC TAPE MECHANISM : TN-21ZVC-2000
BASIC CD MECHANISM : DA11T3C

aiwa

S/M Code No. 09-003-342-8N2

DATA

SPECIFICATIONS

HA MODEL

Tuner section
Frequency range, antenna — FM: 87.5 - 108.0 MHz Rod antenna, AM: 530/531 - 1,710/1,602 kHz (10/9 kHz step) Ferrite bar antenna

Deck section
Track format — 4 tracks, 2 channels / Frequency range — Normal tape: 50 - 12,500 Hz (EIAJ) / Recording system — AC bias / Erasing system — Magnet erase / Heads — Recording/playback head (1), Erasure head (1)

CD player section
Disc — Compact disc / Scanning method — Non-contact optical scanner (semiconductor laser)

General (EXCEPT LH MODEL)
Speaker — 80 mm cone type (2) / Output — Headphones jack (stereo mini-jack) / Power output — 2.5 W + 2.5 W (EIAJ 7 ohms DC) / Power requirements — DC 12 V using eight size C (R14) batteries, AC 120 V, 60 Hz / Power consumption — 18 W
Dimensions (W × H × D) — 310 × 171 × 260 mm (12 1/4 × 6 3/4 × 10 1/4 in.)
Weight (excluding batteries) — 2.8 kg (6 lbs. 3 oz.)

General (LH MODEL)
Speaker — 80 mm cone type (2) / Output — Headphones jack (stereo mini-jack) / Power output — 2,5 W + 2,5 W (EIAJ 7 ohms DC), 1,9 W + 1,9 W (DIN 1% Rated Power) / Power requirements — DC 12 V using eight size C (R14) batteries, AC 110 - 120 V/220 - 240 V switchable, 50/60 Hz / Power consumption — 16 W
Dimensions (W × H × D) — 310 × 171 × 260 mm
Weight (excluding batteries) — 2.8 kg

- Design and specifications are subject to change without notice.

EZ MODEL

Tuner section
Frequency range, antenna — FM: 87.5 - 108.0 MHz Rod antenna, MW: 531/530 - 1,602/1,710 kHz (9/10 kHz step) Ferrite bar antenna, LW: 153 - 288 kHz Ferrite bar antenna

Deck section
Track format — 4 tracks, 2 channels / Frequency range — Normal tape: 50 - 12,500 Hz (EIAJ) / Recording system — AC bias / Erasing system — Magnet erase / Heads — Recording/playback head (1), Erasure head (1)

CD player section
Disc — Compact disc / Scanning method — Non-contact optical scanner (semiconductor laser)

General
Speaker — 80 mm cone type (2) / Output — Headphones jack (stereo mini-jack) / Power output — 2.9 W + 2.9 W (DIN MUSIC POWER), 2.5 W + 2.5 W (EIAJ 7 ohms DC), 1.9 W + 1.9 W (DIN 1% Rated Power) / Power requirements — DC 12 V using eight size C (R14) batteries, AC 230 V, 50 Hz / Power consumption — 16 W
Dimensions (W × H × D) — 310 × 171 × 260 mm
Weight (excluding batteries) — 2.8 kg

- Design and specifications are subject to change without notice.

HR MODEL

Tuner section
Frequency range, antenna — FM: 87.5 - 108.0 MHz Rod antenna, AM: 531/530 - 1,602/1,710 kHz (9/10 kHz step) Ferrite bar antenna

Deck section
Track format — 4 tracks, 2 channels / Frequency range — Normal tape: 50 - 12,500 Hz (EIAJ) / Recording system — AC bias / Erasing system — Magnet erase / Heads — Recording/playback head (1), Erasure head (1)

CD player section
Disc — Compact disc / Scanning method — Non-contact optical scanner (semiconductor laser)

General
Speaker — 80 mm cone type (2) / Output — Headphones jack (stereo mini-jack) / Power output — 2,5 W + 2,5 W (EIAJ 7 ohms DC), 1,9 W + 1,9 W (DIN 1% Rated Power) / Power requirements — DC 12 V using eight size C (R14) batteries, AC 110 - 120 V/220 - 240 V switchable, 50/60 Hz / Power consumption — 16 W
Dimensions (W × H × D) — 310 × 171 × 260 mm
Weight (excluding batteries) — 2.8 kg

- Design and specifications are subject to change without notice.

PROTECTION OF EYES FROM LASER BEAM DURING SERVICING

This set employs laser. Therefore, be sure to follow carefully the instructions below when servicing.

WARNING!

WHEN SERVICING, DO NOT APPROACH THE LASER EXIT WITH THE EYE TOO CLOSELY. IN CASE IT IS NECESSARY TO CONFIRM LASER BEAM EMISSION. BE SURE TO OBSERVE FROM A DISTANCE OF MORE THAN 30cm FROM THE SURFACE OF THE OBJECTIVE LENS ON THE OPTICAL PICK-UP BLOCK.

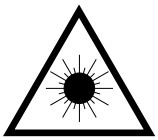

- Caution: Invisible laser radiation when open and interlocks defeated avoid exposure to beam.
- Advarsel: Usynling laserstråling ved åbning, når sikkerhedsafbrydere er ude af funktion. Undgå udsættelse for stråling.

VAROITUS!

Laiteen Käyttäminen muulla kuin tässä käyttöohjeessa mainitulla tavalla saattaa altistaa käyt-täjän turvallisuusluokan 1 ylittävälle näkymättömälle lasersäteilylle.

VARNING!

Om apparaten används på annat sätt än vad som specificeras i denna bruksanvising, kan användaren utsättas för osynling laserstrålning, som överskrider gränsen för laserklass 1.

CAUTION

Use of controls or adjustments or performance of procedures other than those specified herein may result in hazardous radiation exposure.

ATTENTION

L'utilisation de commandes, réglages ou procédures autres que ceux spécifiés peut entraîner une dangereuse exposition aux radiations.

ADVARSEL!

Usynlig laserstråling ved åbning, når sikkerhedsafbrydereer ude af funktion. Undgå udsættelse for stråling.

This Compact Disc player is classified as a CLASS 1 LASER product.
The CLASS 1 LASER PRODUCT label is located on the rear exterior.

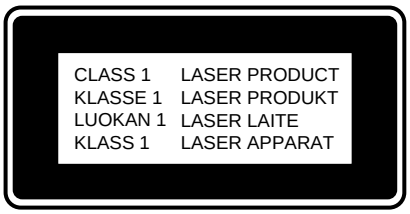

Precaution to replace Optical block (SF-P101NR)

Body or clothes electrostatic potential could ruin laser diode in the optical block. Be sure ground body and workbench, and use care the clothes do not touch the diode.

1) After the connection, remove solder shown in the right figure.

PICK-UP Assy P.C.B

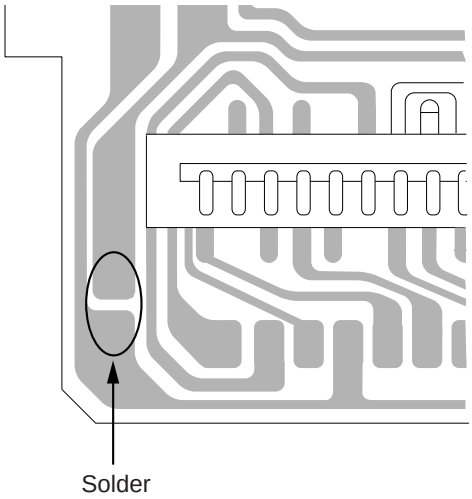

ELECTRICAL MAIN PARTS LIST

DESCRIPTIONで判断できない物は "REFERENCE NAME LIST" を参照してください。
If can't understand for Description please kindly refer to "REFERENCE NAME LIST".

REF. NO	PART NO.	KANRI NO.	DESCRIPTION
IC			
	87-A21-550-010		IC,TA2149N
	87-A21-185-040		C-IC,LC72121M
	87-A21-064-010		IC,LA4227
	87-A21-520-040		C-IC,M61509FP
	87-A20-446-010		C-IC,LA9241ML
	87-A20-459-010		C-IC,LC78622ED
	87-A21-093-010		IC,LA6541D
	8A-CH4-661-010		C-IC,LC867132V-5P07
	87-A21-431-010		IC,BA4560N
TRANSISTOR			
	89-327-143-080		TR,2SC2714 (0.1W)
	87-026-447-080		TR,2SC1740S R
	89-111-624-080		TR,2SA1162Y
	87-026-213-080		CHIP-TR,DTC114YK
	89-503-025-010		C-FET,2SK302GR<EZS>
	89-320-011-080		TR,2SC2001 (15W)
	87-026-230-080		CHIP-TR,DTA114YK<EZS>
	87-026-463-080		TR,2SA933S (0.3W)
	89-327-125-080		C-TR,2SC2712(GR)
	89-112-965-080		TR,2SA1296 (0.75W)
	87-026-291-080		TR,DTC124XS
	87-A30-226-010		TR,2SB1655E
	87-026-462-080		TR,2SC1740 S(RS 0.3W)
	89-318-154-080		TR,2SC1815 (0.4W)
	89-109-332-380		TR,2SA933RS
	89-113-187-080		TR,2SA1318TU
	87-026-239-080		TR,DTC114TK (0.2W)
	87-026-464-080		TR,DTC114TS (0.3W)
DIODE			
	87-070-345-080		DIODE,IN4148
	87-A40-616-070		VARI-CAP,SVC384(S/T)
	87-A40-128-080		C-VARI-CAP,HVU202A
	87-017-072-080		ZENER,HZS3B1
	87-027-607-080		ZENER,HZ7B3L
	87-A40-648-080		ZENER,MTZJ8.2A
	87-A40-234-080		ZENER,MTZJ5.6A
	87-017-978-080		DIODE,1N4003
	87-027-702-080		ZENER,HZ6C2L
	87-020-465-080		DIODE,1SS133 (110MA)
	87-A40-465-010		DIODE,FR202
MAIN C.B			
C30	87-010-260-080		CAP, ELECT 47-25V
C251	87-010-401-080		CAP, ELECT 1-50V
C261	87-010-402-080		CAP, ELECT 2.2-50V
C262	87-010-402-080		CAP, ELECT 2.2-50V
C263	87-010-178-080		CHIP CAP 1000P
C264	87-010-178-080		CHIP CAP 1000P
C265	87-010-263-080		CAP, ELECT 100-10V
C266	87-010-263-080		CAP, ELECT 100-10V
C267	87-010-112-080		CAP, ELECT 100-16V
C268	87-010-112-080		CAP, ELECT 100-16V
C271	87-010-237-080		CAP, ELECT 1000-16V
C272	87-010-237-080		CAP, ELECT 1000-16V
C278	87-010-405-080		CAP, ELECT 10-50V
C279	87-010-385-080		CAP, ELECT 220-25V
C301	87-016-495-000		EL CAP 3300UF/25V
C306	87-010-404-080		CAP, ELECT 4.7-50V
C307	87-010-401-080		CAP, ELECT 1-50V
C308	87-010-221-080		CAP, ELECT 470-10V
C311	87-010-263-080		CAP, ELECT 100-10V
C312	87-010-385-080		CAP, ELECT 220-25V
C321	87-010-197-080		CAP, CHIP 0.01 DM
C322	87-010-263-080		CAP, ELECT 100-10V
C325	87-010-405-080		CAP, ELECT 10-50V
C401	87-010-403-080		CAP, ELECT 3.3-50V
C402	87-010-197-080		CAP, CHIP 0.01 DM
C403	87-010-263-080		CAP, ELECT 100-10V
C404	87-010-248-080		CAP, ELECT 220-10V
C405	87-010-197-080		CAP, CHIP 0.01 DM
C406	87-010-374-080		CAP, ELECT 47-10V
C407	87-010-178-080		CHIP CAP 1000P
C408	87-010-198-080		CAP, CHIP 0.022
C409	87-010-248-080		CAP, ELECT 220-10V
C410	87-010-263-080		CAP, ELECT 100-10V
C411	87-A11-177-080		C-CAP,S 0.15-16 K B
C412	87-010-401-080		CAP, ELECT 1-50V
C413	87-016-369-080		C-CAP,S 0.033-25 B K
C414	87-010-405-080		CAP, ELECT 10-50V
C416	87-010-545-080		CAP, ELECT 0.22-50V
C417	87-012-157-080		C-CAP,S 330P-50 CH
C418	87-010-213-080		C-CAP,S 0.015-50 B
C419	87-A11-608-080		C-CAP,S 0.33-25 K B
C420	87-016-369-080		C-CAP,S 0.033-25 B K
C421	87-A11-177-080		C-CAP,S 0.15-16 K B
C422	87-010-184-080		CHIP CAPACITOR 3300P(K)
C423	87-010-194-080		C-CAP,S 0.47-25V(Z)F
C424	87-A10-712-080		C-CAP,S 0.22-25V(Z)F
C425	87-010-176-080		C-CAP,S 680P-50 SL
C426	87-A11-608-080		C-CAP,S 0.33-25 K B
C428	87-010-197-080		CAP, CHIP 0.01 DM
C429	87-010-186-080		CAP,CHIP 4700P
C430	87-012-156-080		C-CAP,S 220P-50 CH
C431	87-010-545-080		CAP, ELECT 0.22-50V
C432	87-010-374-080		CAP, ELECT 47-10V
C433	87-010-401-080		CAP, ELECT 1-50V
C434	87-010-184-080		CHIP CAPACITOR 3300P(K)
C435	87-010-197-080		CAP, CHIP 0.01 DM
C436	87-010-374-080		CAP, ELECT 47-10V
C437	87-010-404-080		CAP, ELECT 4.7-50V
C438	87-016-669-080		C-CAP,S 0.1-25 K B
C439	87-010-178-080		CHIP CAP 1000P
C440	87-010-145-080		C-CAP,S 1P-50 CH
C441	87-010-197-080		CAP, CHIP 0.01 DM
C442	87-010-312-080		C-CAP,S 15P-50 CH
C445	87-012-368-080		C-CAP,S 0.1-50 F
C446	87-012-368-080		C-CAP,S 0.1-50 F
C447	87-012-368-080		C-CAP,S 0.1-50 F
C448	87-010-315-080		C-CAP,S 27P-50 CH
C450	87-012-140-080		CAP 470P
C451	87-012-156-080		C-CAP,S 220P-50 CH
C455	87-010-247-080		CAP, ELECT 100-50V
C457	87-010-312-080		C-CAP,S 15P-50 CH
C458	87-010-312-080		C-CAP,S 15P-50 CH
C459	87-010-263-080		CAP, ELECT 100-10V
C460	87-015-819-080		CAPACITOR,0.01
C461	87-010-197-080		CAP, CHIP 0.01 DM
C462	87-010-248-080		CAP, ELECT 220-10V
C463	87-018-134-010		CAP, TC U 0.01-16NY UP050
C465	87-010-404-080		CAP, ELECT 4.7-50V
C466	87-012-368-080		C-CAP,S 0.1-50 F
C467	87-010-263-080		CAP, ELECT 100-10V
C469	87-012-154-080		C-CAP,S 150P-50 CH
C470	87-010-544-080		CAP, ELECT 0.1-50V
C471	87-015-785-080		CHIP CAPACITOR, 0.1FZ-25Z
C472	87-015-785-080		CHIP CAPACITOR, 0.1FZ-25Z
C473	87-015-785-080		CHIP CAPACITOR, 0.1FZ-25Z
C474	87-015-785-080		CHIP CAPACITOR, 0.1FZ-25Z
C475	87-010-197-080		CAP, CHIP 0.01 DM
C476	87-010-236-080		CAP,E 1000-10 SME
C477	87-010-197-080		CAP, CHIP 0.01 DM
C478	87-010-263-080		CAP, ELECT 100-10V

REF. NO	PART NO.	KANRI NO.	DESCRIPTION
C479	87-010-197-080		CAP, CHIP 0.01 DM
C480	87-010-221-080		CAP, ELECT 470-10V
C481	87-010-405-080		CAP, ELECT 10-50V
C482	87-010-405-080		CAP, ELECT 10-50V
C483	87-012-156-080		C-CAP,S 220P-50 CH
C484	87-012-156-080		C-CAP,S 220P-50 CH
C489	87-012-368-080		C-CAP,S 0.1-50 F
C490	87-012-368-080		C-CAP,S 0.1-50 F
C491	87-010-197-080		CAP, CHIP 0.01 DM
C493	87-010-197-010		C-CAP,S 0.01-25K B GRM <EXCEPT HAS>
C494	87-010-197-080		CAP, CHIP 0.01 DM<HAS>
C495	87-010-184-010		C-CAP,S 3300-50KB<EXCEPT HAS>
C499	87-018-120-010		CAP,TC U 120P-50KB UP050 <EXCEPT HAS>
C501	87-012-368-080		C-CAP,S 0.1-50 F
C502	87-010-322-080		C-CAP,S 100P-50 CH
C503	87-010-322-080		C-CAP,S 100P-50 CH
C504	87-010-322-080		C-CAP,S 100P-50 CH
C505	87-010-322-080		C-CAP,S 100P-50 CH
C506	87-010-322-080		C-CAP,S 100P-50 CH
C510	87-016-669-080		C-CAP,S 0.1-25 K B
C831	87-010-198-080		CAP, CHIP 0.022
CN202	8A-CH4-689-010		CONN BASE 3P 2.5mm
CN205	87-A60-109-010		CONN,2P V S2M-2W
CN301	87-099-416-010		CONN,3P EH H WHT
CN401	87-A60-424-010		CONN,16P V TOC-B
CN403	87-099-201-010		CONN,8P 6216 H
CN802	87-049-469-010		CONN,4P V
CNA402	8A-CDB-622-010		CONN ASSY,6P CD-MOTOR
JW425	87-003-098-010		COIL,2.2UH K LAL02<EXCEPT HAS>
JW429	87-003-098-010		COIL,2.2UH K LAL02<EXCEPT HAS>
JW442	87-003-098-010		COIL,2.2UH K LAL02<EXCEPT HAS>
L401	87-003-102-080		COIL, 10UH
L402	87-003-098-010		COIL,2.2UH K LAL02<EXCEPT HAS>
L404	87-003-152-080		COIL, 100UH
R840	87-029-124-010		RES,FUSE 2.2-1/4
SFR430	87-024-437-080		SFR100K,RH063EC
X401	8Z-CD5-633-010		VIB, CER16.93MHZ FCR16.93M2

TAPE C.B

REF. NO	PART NO.	KANRI NO.	DESCRIPTION
C211	87-010-805-080		CAP, S 1-16
C212	87-010-805-080		CAP, S 1-16
C215	87-016-460-080		C-CAP,S 0.22-16 B
C216	87-016-460-080		C-CAP,S 0.22-16 B
C231	87-010-213-080		C-CAP,S 0.015-50 B
C232	87-010-213-080		C-CAP,S 0.015-50 B
C233	87-A10-201-080		C-CAP,S0.33-16 KB
C234	87-A10-201-080		C-CAP,S0.33-16 KB
C235	87-016-669-080		C-CAP,S 0.1-25 K B
C236	87-016-669-080		C-CAP,S 0.1-25 K B
C237	87-010-408-080		CAP, ELECT 47-50V
C239	87-010-197-080		CAP, CHIP 0.01 DM
C240	87-010-197-080		CAP, CHIP 0.01 DM
C247	87-010-401-080		CAP, ELECT 1-50V
C248	87-010-401-080		CAP, ELECT 1-50V
C309	87-010-197-080		CAP, CHIP 0.01 DM
C310	87-010-248-080		CAP, ELECT 220-10V
C316	87-010-384-080		CAP, ELECT 100-25V
C801	87-010-248-080		CAP, ELECT 220-10V
C805	87-012-365-080		C-CAP,S 0.027-25VBK
C806	87-012-365-080		C-CAP,S 0.027-25VBK
C807	87-010-405-080		CAP, ELECT 10-50V
C808	87-010-405-080		CAP, ELECT 10-50V
C809	87-010-405-080		CAP, ELECT 10-50V
C810	87-010-405-080		CAP, ELECT 10-50V
C811	87-010-178-080		CHIP CAP 1000P
C812	87-010-178-080		CHIP CAP 1000P
C816	87-010-180-080		C-CER 1500P
C817	87-010-180-080		C-CER 1500P
C819	87-010-426-080		C-CAP,S 0.012-25 B
C820	87-010-426-080		C-CAP,S 0.012-25 B
C821	87-010-401-080		CAP, ELECT 1-50V
C822	87-010-401-080		CAP, ELECT 1-50V
C823	87-010-178-080		CHIP CAP 1000P
C824	87-010-178-080		CHIP CAP 1000P
C829	87-010-178-080		CHIP CAP 1000P
C830	87-010-178-080		CHIP CAP 1000P
C833	87-018-195-080		CAP, CER 1200P-16V
C834	87-010-248-080		CAP, ELECT 220-10V
C835	87-010-322-080		C-CAP,S 100P-50 CH
C836	87-010-322-080		C-CAP,S 100P-50 CH
C843	87-010-197-080		CAP, CHIP 0.01 DM
C844	87-018-124-080		CAP, CER 270P-50V
C845	87-010-178-080		CHIP CAP 1000P
C846	87-010-263-080		CAP, ELECT 100-10V
C851	87-010-186-080		CAP,CHIP 4700P
C852	87-010-178-080		CHIP CAP 1000P
C853	87-018-211-080		CAP, CER 0.01-50<EXCEPT HAS>
C853	87-A11-145-080		CAP,TC U 0.01-50 Z F<HAS>
CN201	87-099-018-010		CONN,16P
CN801	87-A60-110-010		CONN,4P V S2M-4W
CNA302	8A-CDB-627-010		CONN ASSY,6P MA-TUNER
L801	87-007-342-010		COIL,OSC 85K BIAS
SW801	88-CT6-619-010		BACK SLIDE SW 6P2T SHORTIN

FRONT C.B

REF. NO	PART NO.	KANRI NO.	DESCRIPTION
C601	87-010-313-080		CAP, CHIP 18P
C602	87-010-315-080		C-CAP,S 27P-50 CH
C603	87-010-415-040		CAP,E 10-50 5L
C604	87-010-312-080		C-CAP,S 15P-50 CH
C605	87-010-317-080		C-CAP,S 39P-50 CH
C606	87-015-785-080		CHIP CAPACITOR, 0.1FZ-25Z <EXCEPT EZS>
C607	87-010-196-080		CHIP CAPACITOR,0.1-25
C608	87-010-196-080		CHIP CAPACITOR,0.1-25
C610	87-010-555-040		CAP,E 100-10 GAS
C611	87-010-196-080		CHIP CAPACITOR,0.1-25
C612	87-A10-189-040		CAP,E 220-10
C613	87-010-495-040		CAP,E 2.2-50 GAS
C614	87-010-196-080		CHIP CAPACITOR,0.1-25
C615	87-010-493-040		CAP,E 0.47-50 GAS
C616	87-010-494-040		CAP,E 1-50 GAS
C620	87-010-555-040		CAP,E 100-10 GAS
C625	87-010-197-080		CAP, CHIP 0.01 DM<EXCEPT EZS>
C661	87-010-498-040		CAP,E 10-16 GAS
CN601	87-099-033-010		16P 6216 H
CN602	87-099-201-010		CONN,8P 6216 H
CNA603	8A-CHB-616-010		CONN ASSY,4P TU-FR(DIGITAL)
CNA604	8A-CHB-617-010		CONN ASSY,2P VOL-KEY
CNA606	8A-CHB-621-010		CONN ASSY,8P FUNCT-KEY
L601	87-003-171-010		COIL,15UH TROIDAL
LCD601	8A-CHB-625-010		LCD,HLC7107ACH-11
LED602	88-CD6-630-010		LED,934ID RED
LED603	88-CD6-630-010		LED,934ID RED
LED604	88-CD6-630-010		LED,934ID RED
LED608	88-CD6-630-010		LED,934ID RED
S601	8Z-CT6-636-010		SW,TACT EVQJAC04M
S604	8Z-CT6-636-010		SW,TACT EVQJAC04M
S605	8Z-CT6-636-010		SW,TACT EVQJAC04M
S606	8Z-CT6-636-010		SW,TACT EVQJAC04M
S607	8Z-CT6-636-010		SW,TACT EVQJAC04M
X601	87-030-273-010		VIB,XTAL 32.768K5PPM
X602	87-030-376-080		VIB,CER CSA5.76MG200

REF. NO	PART NO.	KANRI NO.	DESCRIPTION
TU C.B			
C1	87-010-312-080		C-CAP,S 15P-50V<EZS>
C1	87-010-314-080		C-CAP,S 22P-50V<EXCEPT EZS>
C2	87-010-316-080		C-CAP,S 33P-50 CH
C3	87-010-312-080		C-CAP,S 15P-50V<EZS>
C3	87-010-314-080		C-CAP,S 22P-50V<EXCEPT EZS>
C5	87-A11-067-080		C-CAP,S 1-10 K B
C6	87-010-313-080		CAP, CHIP 18P<HRS,HAS>
C7	87-014-049-080		CAP,PP 470P-100 J<EXCEPT HRL>
C8	87-012-349-080		C-CAP,S 1000P-50 CH
C10	87-010-197-080		CAP, CHIP 0.01 DM
C10	87-010-197-080		CAP, CHIP 0.01 DM
C11	87-010-197-080		CAP, CHIP 0.01 DM
C12	87-010-197-080		CAP, CHIP 0.01 DM
C13	87-010-150-080		C-CAP,S 6P-50 CH
C14	87-010-303-080		C-CAP,S 330P-50CH
C15	87-012-349-080		C-CAP,S 1000P-50 CH
C16	87-010-374-080		CAP, ELECT 47-10V
C17	87-010-198-080		CAP, CHIP 0.022
C18	87-015-835-080		C-CAP,0.047 D
C19	87-010-263-080		CAP, ELECT 100-10V
C20	87-010-404-080		CAP, ELECT 4.7-50V
C21	87-010-197-080		CAP, CHIP 0.01 DM
C22	87-010-197-080		CAP, CHIP 0.01 DM
C23	87-010-197-080		CAP, CHIP 0.01 DM
C25	87-016-460-080		C-CAP,S 0.22-16 B
C26	87-018-131-080		CAP, CER 1000P-50V
C27	87-A11-067-080		C-CAP,S 1-10 K B
C28	87-016-669-080		C-CAP,S 0.1-25 K B
C29	87-016-669-080		C-CAP,S 0.1-25 K B
C30	87-010-213-080		C-CAP,S 0.015-50 B<EXCEPT HAS>
C30	87-010-198-080		CAP, CHIP 0.022<HAS>
C31	87-010-213-080		C-CAP,S 0.015-50 B<EXCEPT HAS>
C31	87-010-198-080		CAP, CHIP 0.022<HAS>
C33	87-A11-729-080		C-CAP,0.47-16V Y5V
C34	87-A11-729-080		C-CAP,0.47-16V Y5V
C35	87-015-819-080		CAPACITOR,0.01
C36	87-010-263-080		CAP, ELECT 100-10V
C37	87-010-197-080		CAP, CHIP 0.01 DM
C38	87-010-374-080		CAP, ELECT 47-10V
C39	87-010-404-080		CAP, ELECT 4.7-50V
C40	87-010-197-080		CAP, CHIP 0.01 DM
C41	87-012-349-080		C-CAP,S 1000P-50 CH
C42	87-012-349-080		C-CAP,S 1000P-50 CH
C43	87-012-349-080		C-CAP,S 1000P-50 CH
C44	87-010-311-080		CAP 12P
C45	87-010-312-080		C-CAP,S 15P-50 CH
C46	87-010-197-080		CAP, CHIP 0.01 DM
C47	87-010-197-080		CAP, CHIP 0.01 DM
C48	87-010-197-080		CAP, CHIP 0.01 DM
C49	87-012-140-080		CAP 470P
C50	87-010-197-080		CAP, CHIP 0.01 DM
C51	87-010-316-080		C-CAP,S 33P-50 CH<EXCEPT EZS>
C52	87-010-197-080		CAP, CHIP 0.01 DM<EZS>
C53	87-010-197-080		CAP, CHIP 0.01 DM<EZS>
C54	87-014-055-080		CAP,PP 820P-100 J<EZS>
C55	87-010-197-080		CAP, CHIP 0.01 DM<EZS>
C61	87-010-184-080		CHIP CAPACITOR 3300P(K)<HRL>
C64	87-010-314-080		C-CAP,S 22P-50V
C71	87-010-197-080		CAP, CHIP 0.01 DM
C72	87-010-263-080		CAP, ELECT 100-10V
C73	87-010-197-080		CAP, CHIP 0.01 DM
C91	87-010-197-080		CAP, CHIP 0.01 DM<EXCEPT EZS>
C92	87-010-197-080		CAP, CHIP 0.01 DM
C93	87-010-197-080		CAP, CHIP 0.01 DM
CF1	87-A91-094-010		FLTR,CDA10.7 MG80A
CF2	82-785-747-080		CF,MS2 GHY,R<EXCEPT EZS>
CF2	87-008-261-010		FILTER, SFE10.7MA5-A<EZS>
CF3	82-785-747-080		CF,MS2 GHY,R<EXCEPT EZS>
CF3	87-008-261-010		FILTER, SFE10.7MA5-A<EZS>
CN2	87-099-194-010		CONN,6P 6216V
CN3	87-A60-110-010		CONN BASE 4P
HLD1	88-CD6-661-010		HLDR,BAR ANT.
HLD2	88-CD6-661-010		HLDR,BAR ANT.
L2	87-A50-560-010		COIL,FM BPF(ACD)
L3	8A-CH4-670-010		BAR-ANT,MW 2B-ACH(COI)<HRS,HAS>
L3	8A-CH4-671-010		BAR-ANT,MW/LW 3B-ACH(COI)<EZS>
L4	87-A50-420-010		COIL,MW OSC(SYN)<EXCEPT HRL>
L4	87-A50-572-010		COIL,MW OSC-HE(ACH)<HRL>
L5	87-A50-566-010		COIL,FM RF EX(ACH)
L6	87-A50-568-010		COIL,FM OSC EX(ACH)
L7	87-A91-308-010		FLTR,PCFAZH- 450T (TOK)
L8	87-005-849-080		COIL,10UH(CECS)
L51	87-A50-421-010		COIL,LW OSC(SYN)<EZS>
TC1	87-011-254-080		TRIMER,20P LAR
TC51	87-011-233-080		TRIMER,50P VCT54<EZS>
X1	87-A70-061-010		VIB,XTAL 4.500MHZ CSA-309
HP C.B			
CN203	87-049-469-010		CONN,4P V
J251	87-009-216-010		JACK, DIA 3.5
LED C.B			
CN607	87-009-236-010		CONN 8P PH H
LED605	88-CD6-630-010		LED,934ID RED
LED606	88-CD6-630-010		LED,934ID RED
LED611	88-CD6-631-010		LED,934GD GRN
S608	8Z-CT6-636-010		SW,TACT EVQJAC04M
S609	8Z-CT6-636-010		SW,TACT EVQJAC04M
S610	8Z-CT6-636-010		SW,TACT EVQJAC04M
S611	8Z-CT6-636-010		SW,TACT EVQJAC04M
S613	8Z-CT6-636-010		SW,TACT EVQJAC04M
VOL C.B			
CN608	84-722-632-010		CONN,2P H
S614	8Z-CT6-636-010		SW,TACT EVQJAC04M
S615	8Z-CT6-636-010		SW,TACT EVQJAC04M
PWR C.B			
C901	87-018-205-080		CAP, CERA-SOL 0.022
C902	87-018-205-080		CAP, CERA-SOL 0.022
C903	87-018-205-080		CAP, CERA-SOL 0.022
C904	87-018-205-080		CAP, CERA-SOL 0.022
CNA901	8A-CDB-621-010		CONN ASSY,3P POWER
⚠PR901	87-A90-092-080		PROTECTOR,2.5A 491
MOTOR C.B			
M2	9X-262-576-910		MOTOR GEAR ASSY
PIN3	91-564-722-110		CONNECTOR 6P
SW1	91-572-085-120		LEAF SW
BATT C.B			

- Regarding connectors, they are not stocked as they are not the initial order items.
  The connectors are available after they are supplied from connector manufacturers upon the order is received.

○チップ抵抗部品コード／CHIP RESISTOR PART CODE

チップ抵抗部品コードの成り立ち
Chip Resistor Part Coding

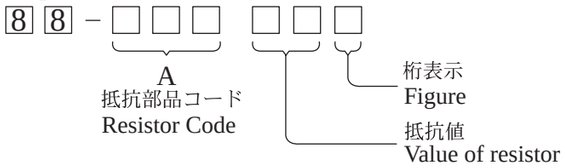

チップ抵抗
Chip resistor

容量 Wattage	種類 Type	許容誤差 Tolerance	記号 Symbol	寸法／Dimensions (mm) 外形／Form	L	W	t	抵抗コード ：A Resistor Code ：A
1/16W	1005	±5%	CJ	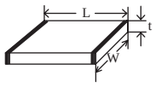	1.0	0.5	0.35	104
1/16W	1608	±5%	CJ		1.6	0.8	0.45	108
1/10W	2125	±5%	CJ		2	1.25	0.45	118
1/8W	3216	±5%	CJ		3.2	1.6	0.55	128

TRANSISTOR ILLUSTRATION

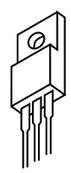

2SB1655E

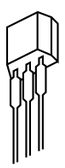

DTC114TS

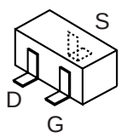

2SK302GR

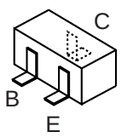

2SA1162Y
2SC2712
2SC2714
DTA114YK
DTC114TK
DTC114YK

2SA933RS
2SC1740S R
DTC124XS

2SA933S
2SA1296
2SA1318TU
2SC1740 S
2SC1815
2SC2001

LCD DISPLAY
LCD, HLC7107ACH-11

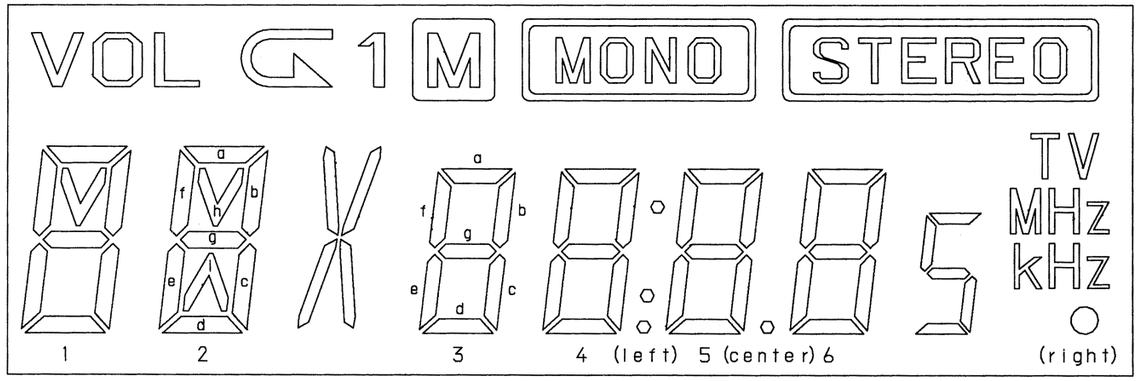

NO.	COM.1	COM.2	COM.3
1	2b	2c	2d
2	1b	1c	1d
3	1a	1f	1e
4	1h	1g	VOL
5	2a	2f	2e
6	2h	2g	2i
7	3f	3e	1
8	3a	3g	3d
9	3b	3c	1
10	4f	4e	M
11	4a	4g	4d
12	4b	4c	X
13	:	● (left)	MONO
14	5f	5e	● (right)
15	5a	5g	5d
16	5b	5c	● (center)
17	6f	6e	STEREO
18	6a	6g	6d
19	6b	6c	5
20	TV	MHz	kHz
21	COM.1		
22		COM.2	
23			COM.3

WIRING-1 (MAIN/TAPE)

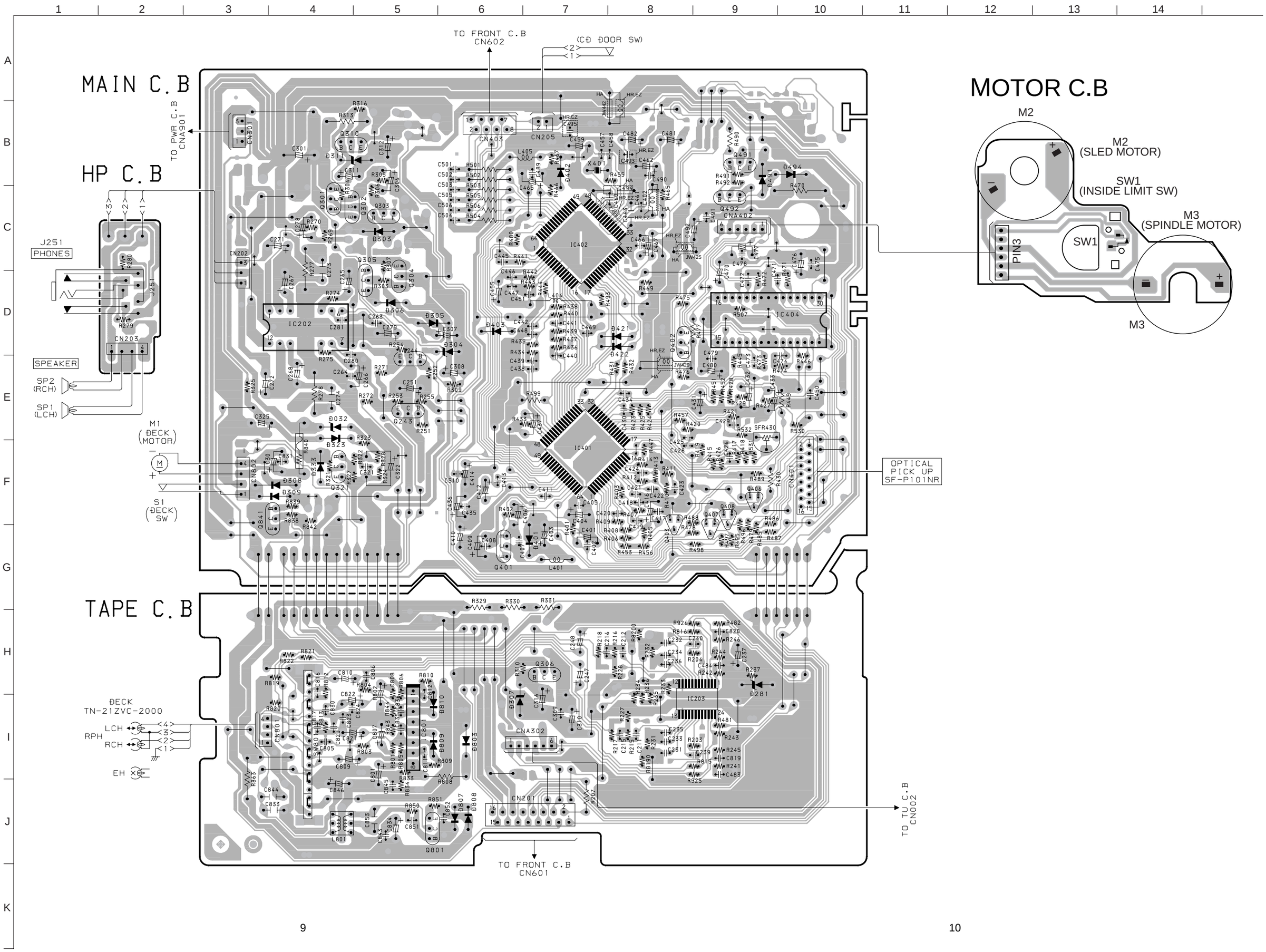

SCHEMATIC DIAGRAM-1 (MAIN)

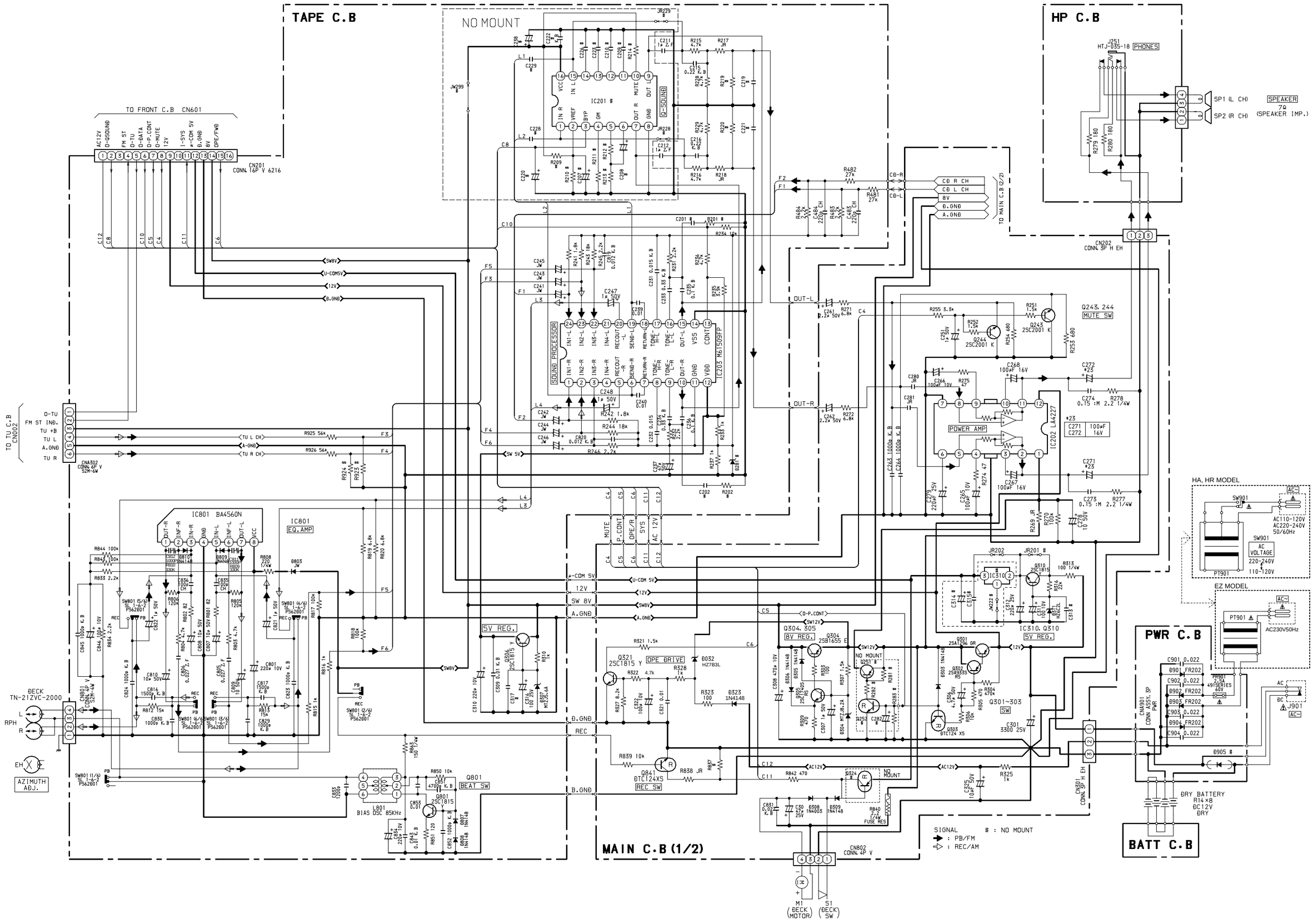

SCHEMATIC DIAGRAM-2 (CD)

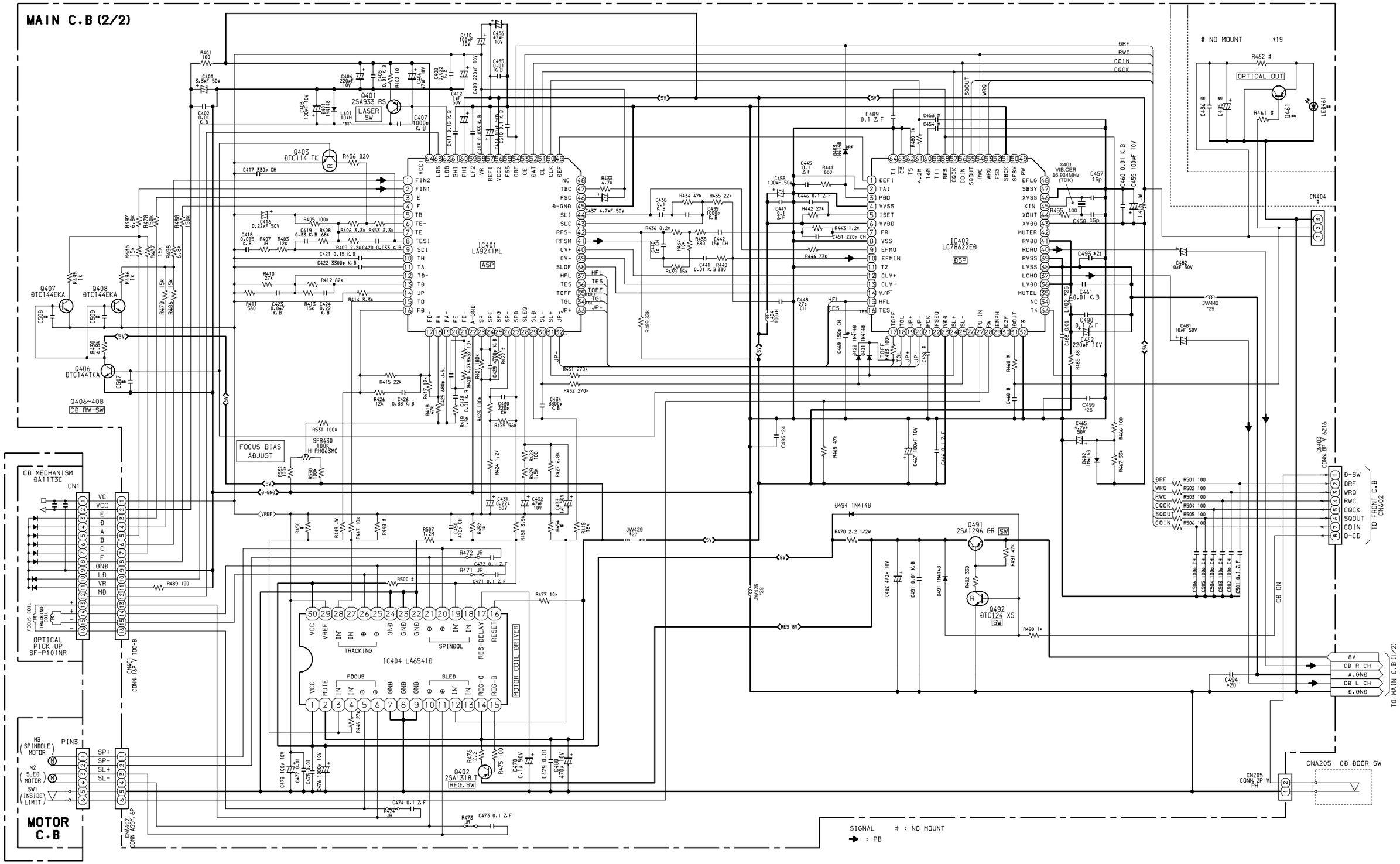

	*19 (OPTI OUT)	*20 (C494)	*21 (C493)	*24 (C495)	*25 (L402)	*26 (C499)	*27 (JW429)	*28 (JW425)	*29 (JW442)
HA	NO MOUNT	0.01	NM	NM	JW	NM	JW	JW	JW
HR	↓	NM	0.01	0.01	2.2μ	120p	COIL 2.2μ	COIL 2.2μ	COIL 2.2μ
EZ	↓	NM	↓	↓	↓	↓	↓	↓	↓

WIRING-2 (POWER)

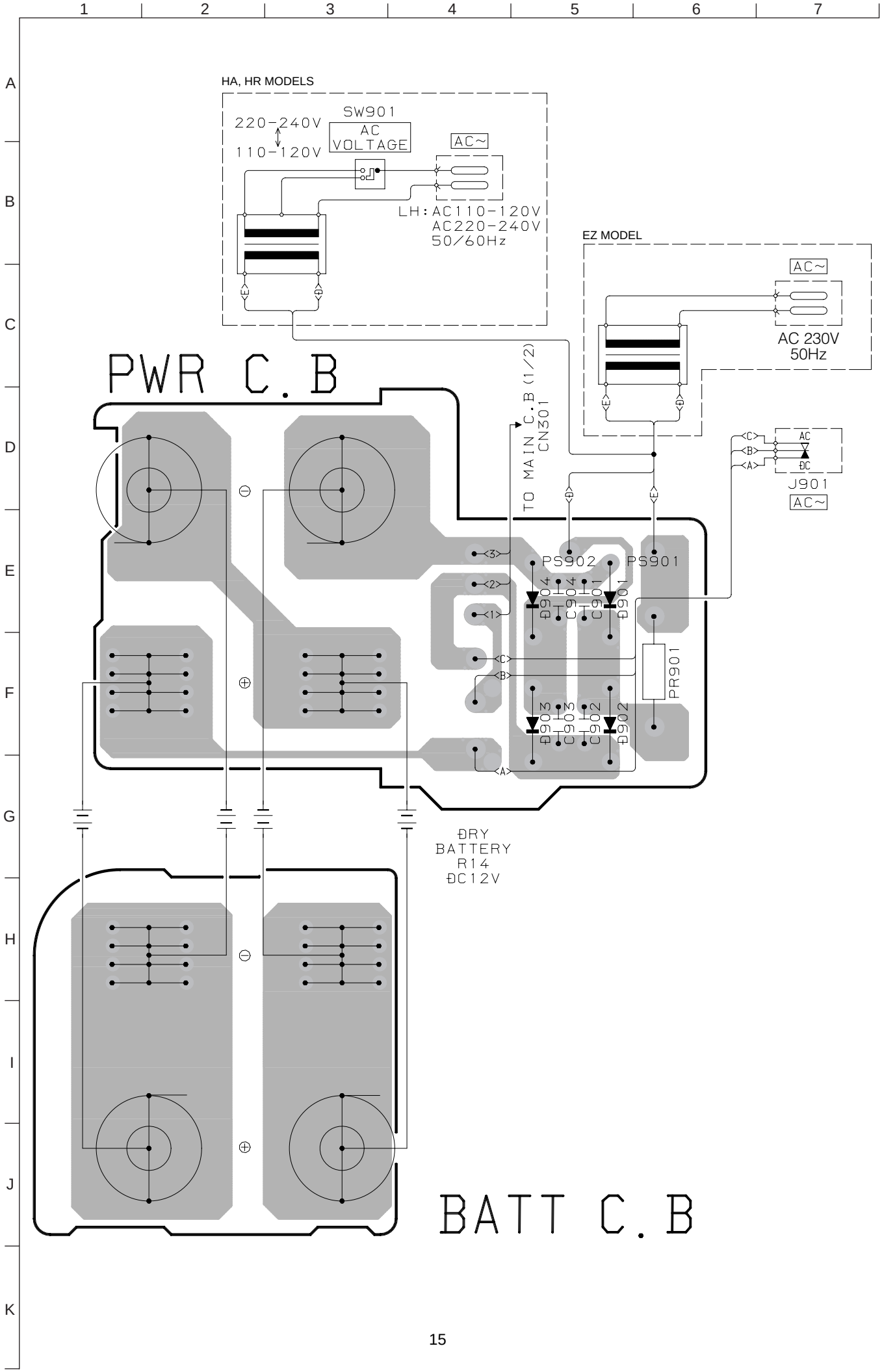

WIRING-3 (TU: HA, HR)

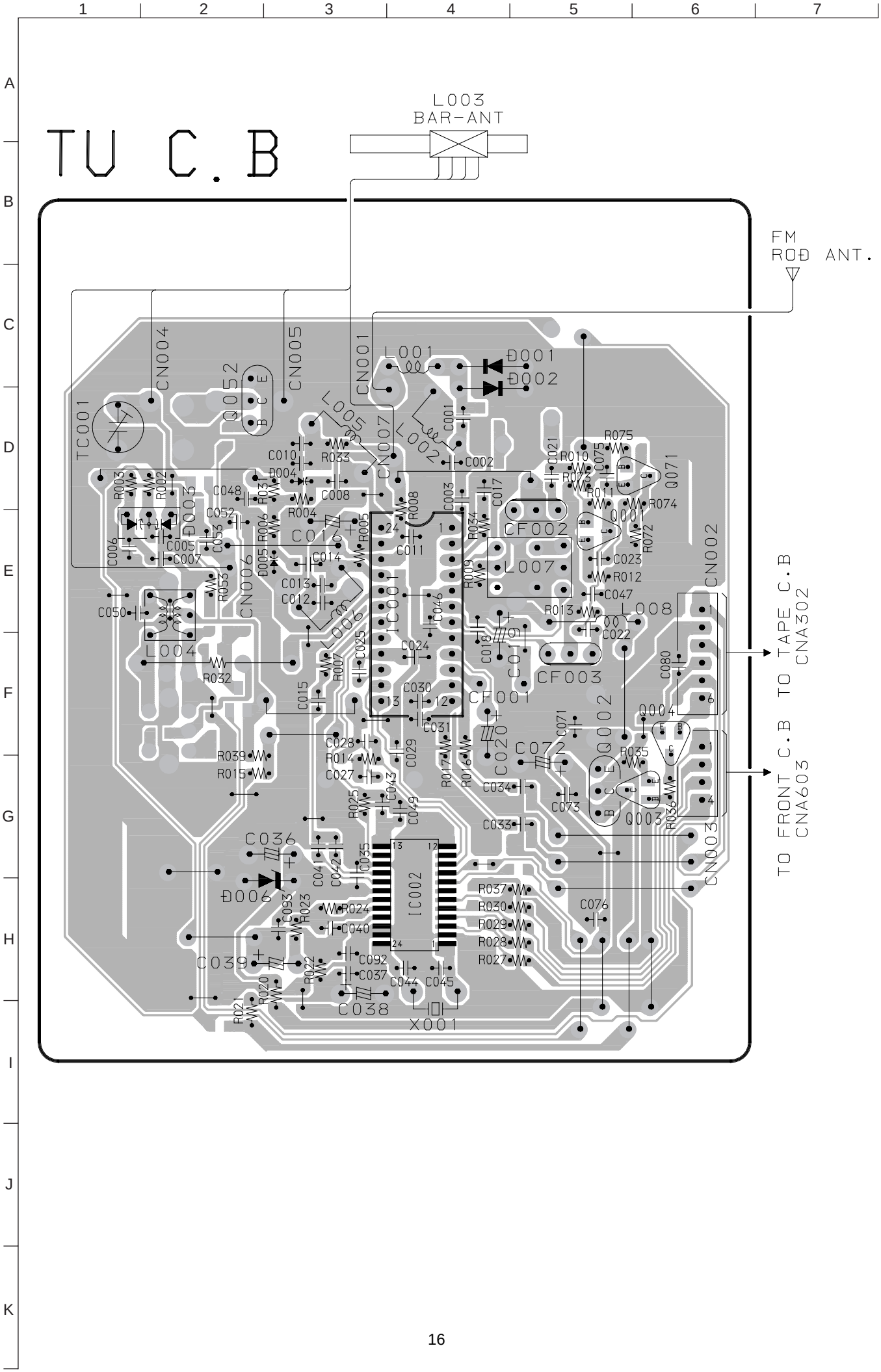

SCHEMATIC DIAGRAM-3 (TUNER: HA, HR)

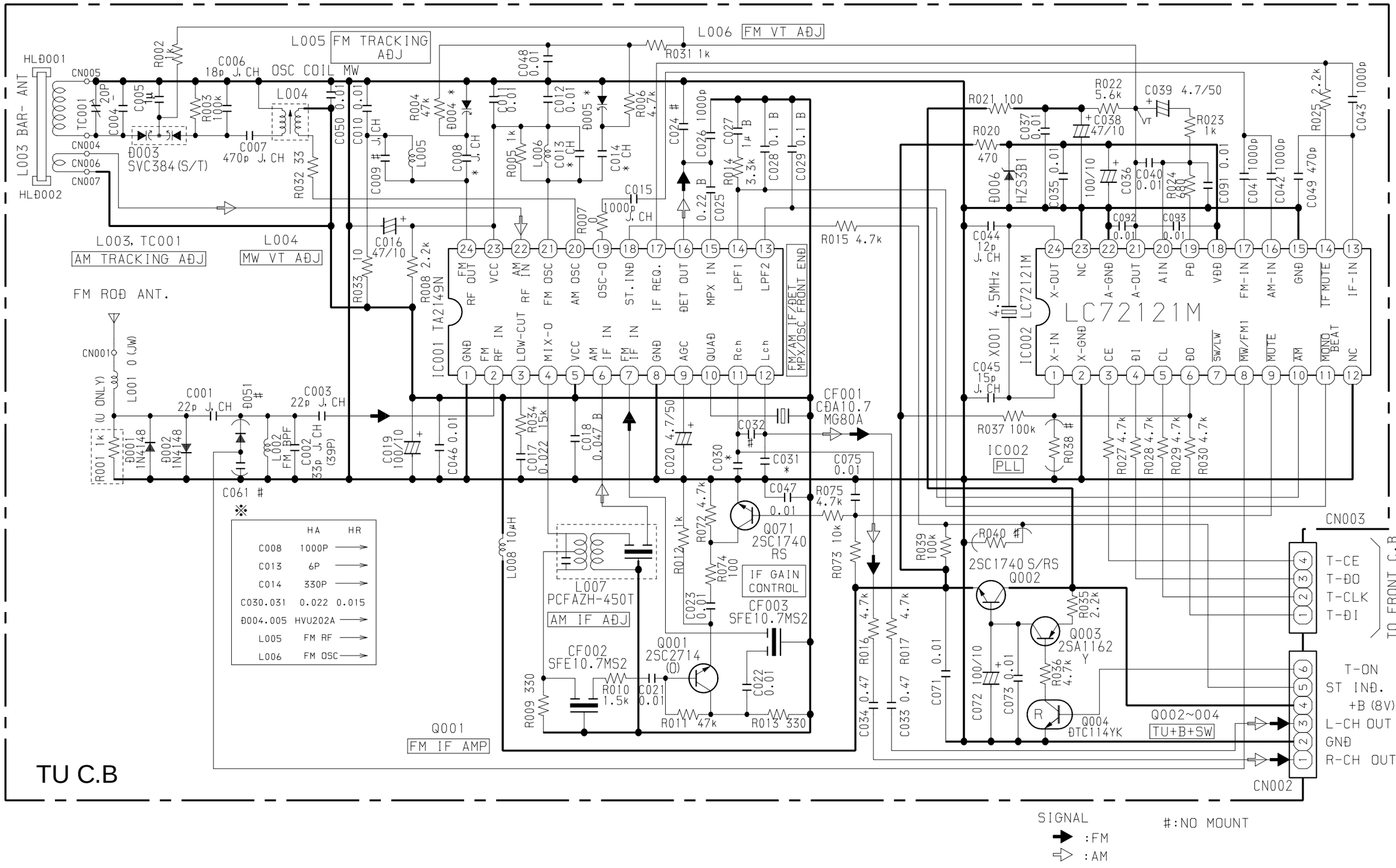

	HA	HR
C008	1000P	
C013	6P	
C014	330P	
C030.031	0.022	0.015
Đ004.005	HVU202A	
L005	FM RF	
L006	FM OSC	

SCHEMATIC DIAGRAM-4 (TUNER: EZ)

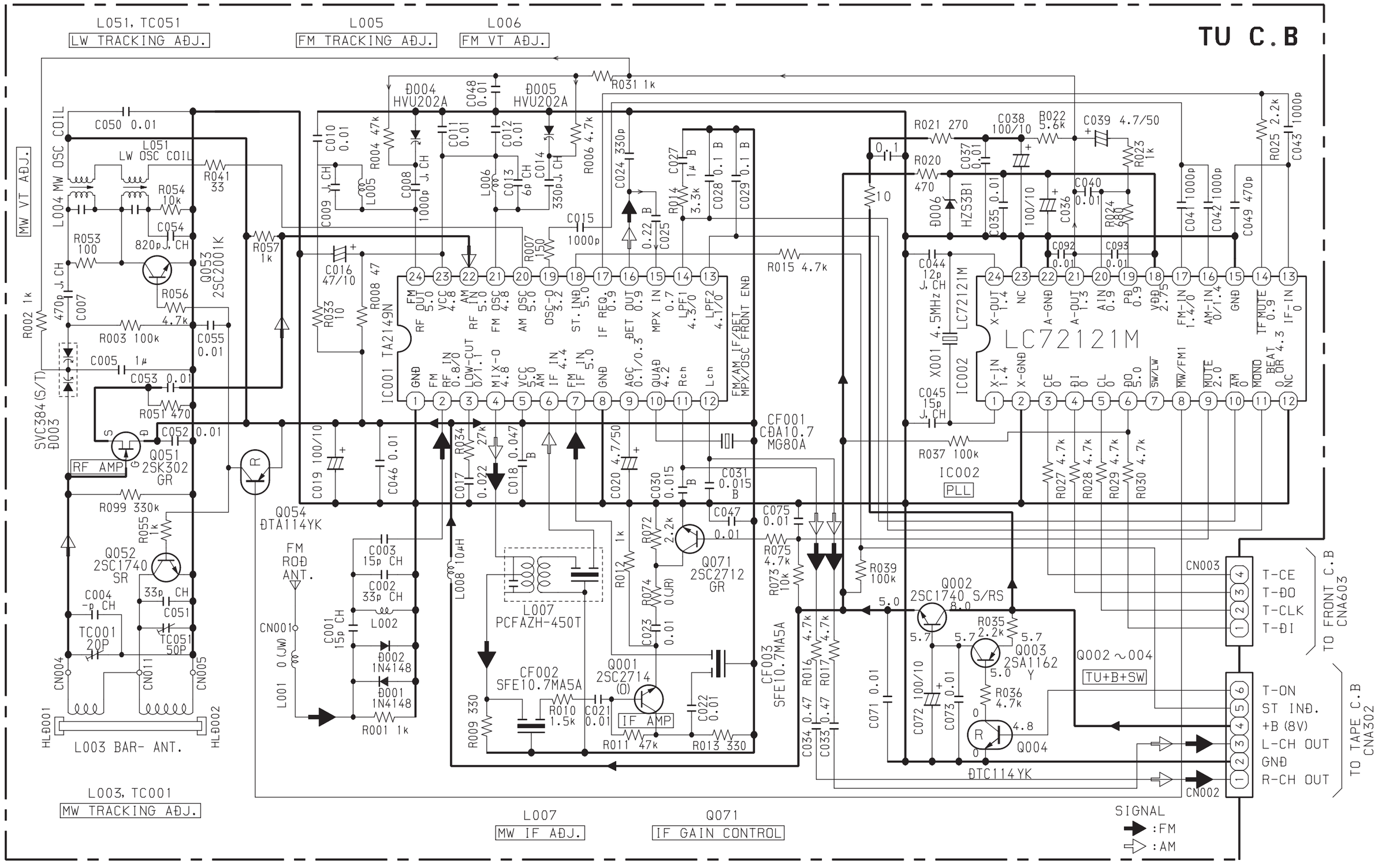

WIRING-4 (TUNER: EZ)

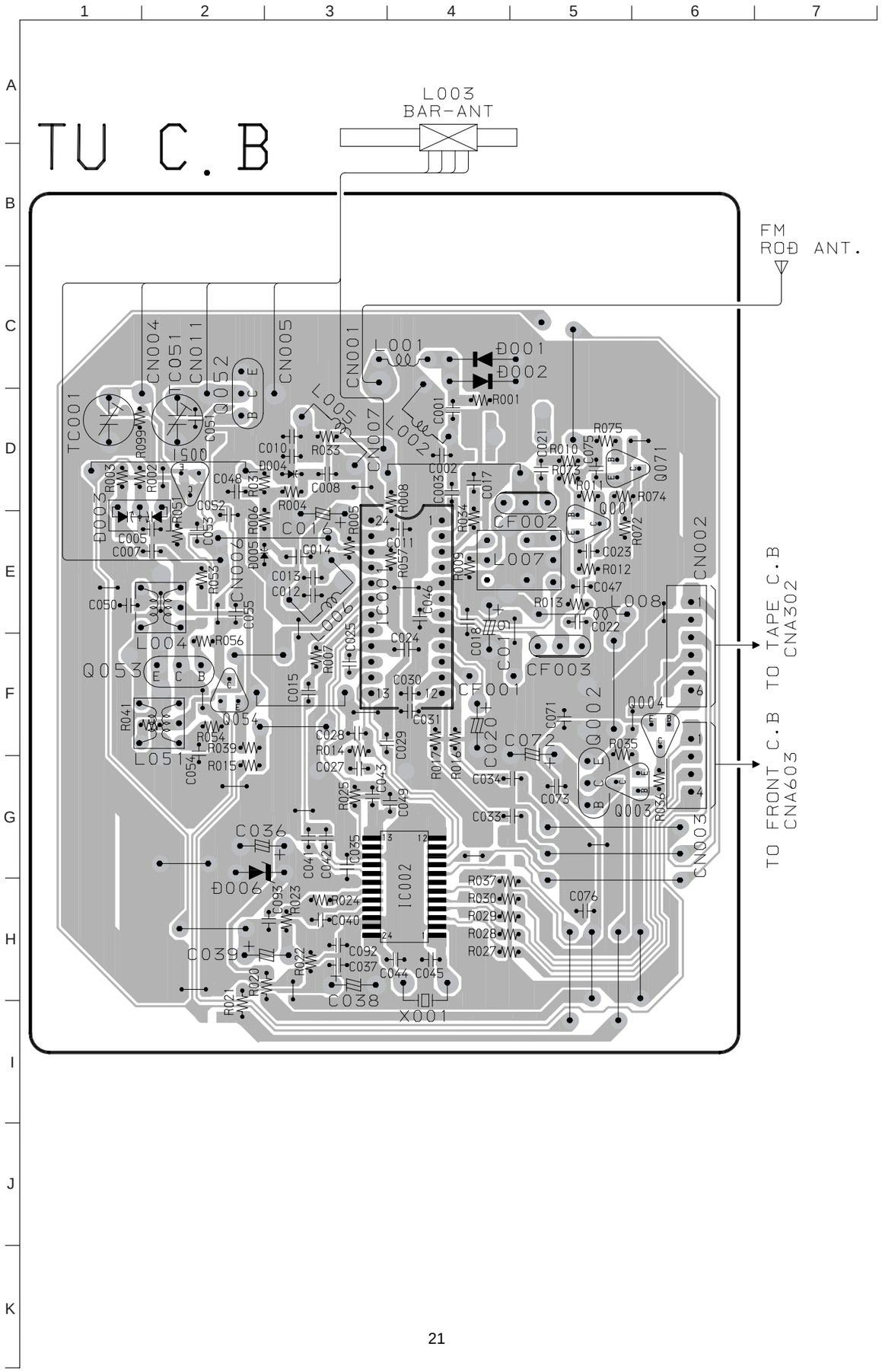

IC BLOCK DIAGRAM

IC, M61509FP

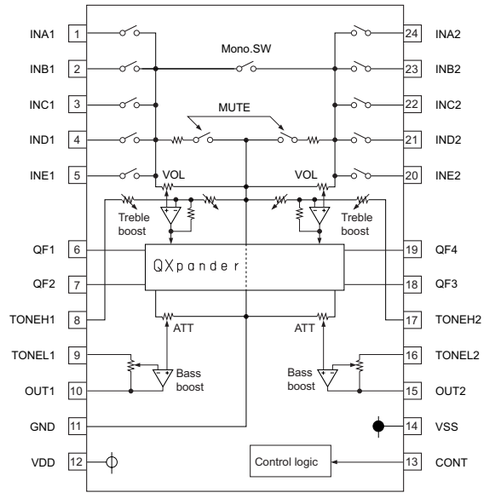

IC, TA2149N

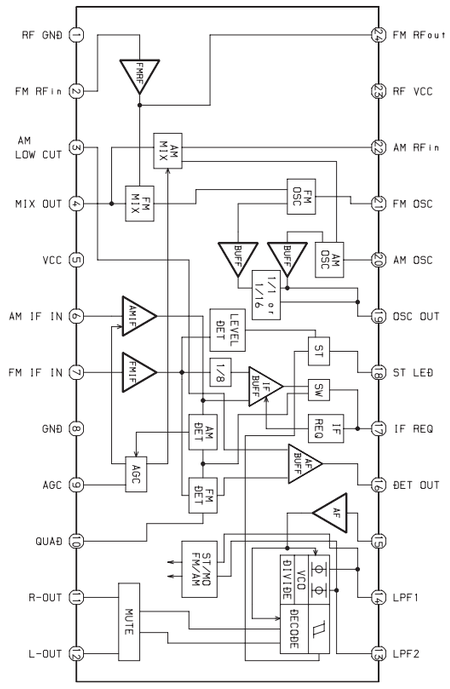

IC, BA4560N

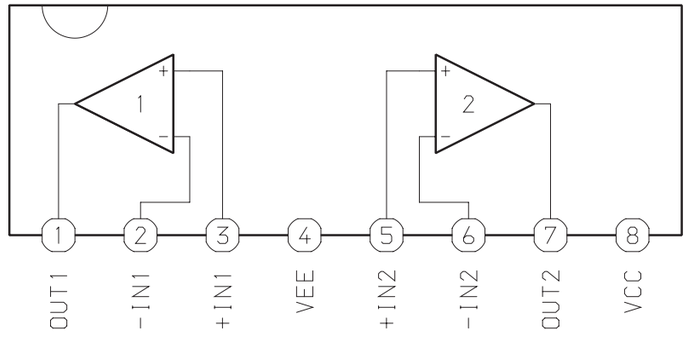

IC, LA6541D

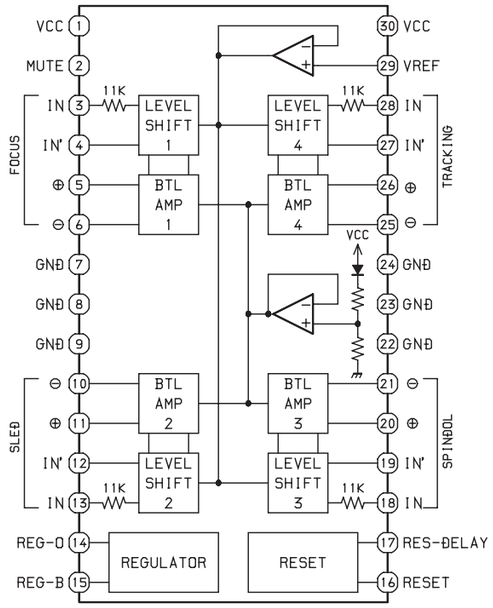

IC, LC72121M

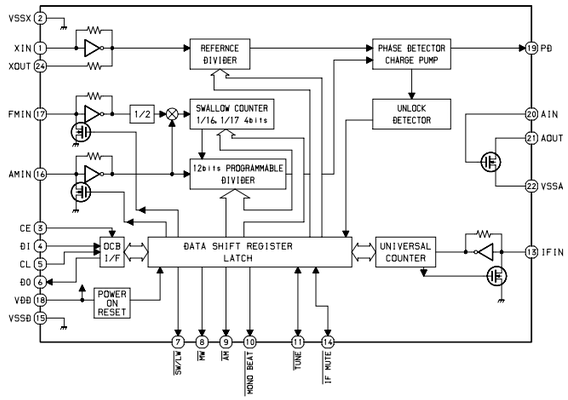

WIRING-5 (FRONT)

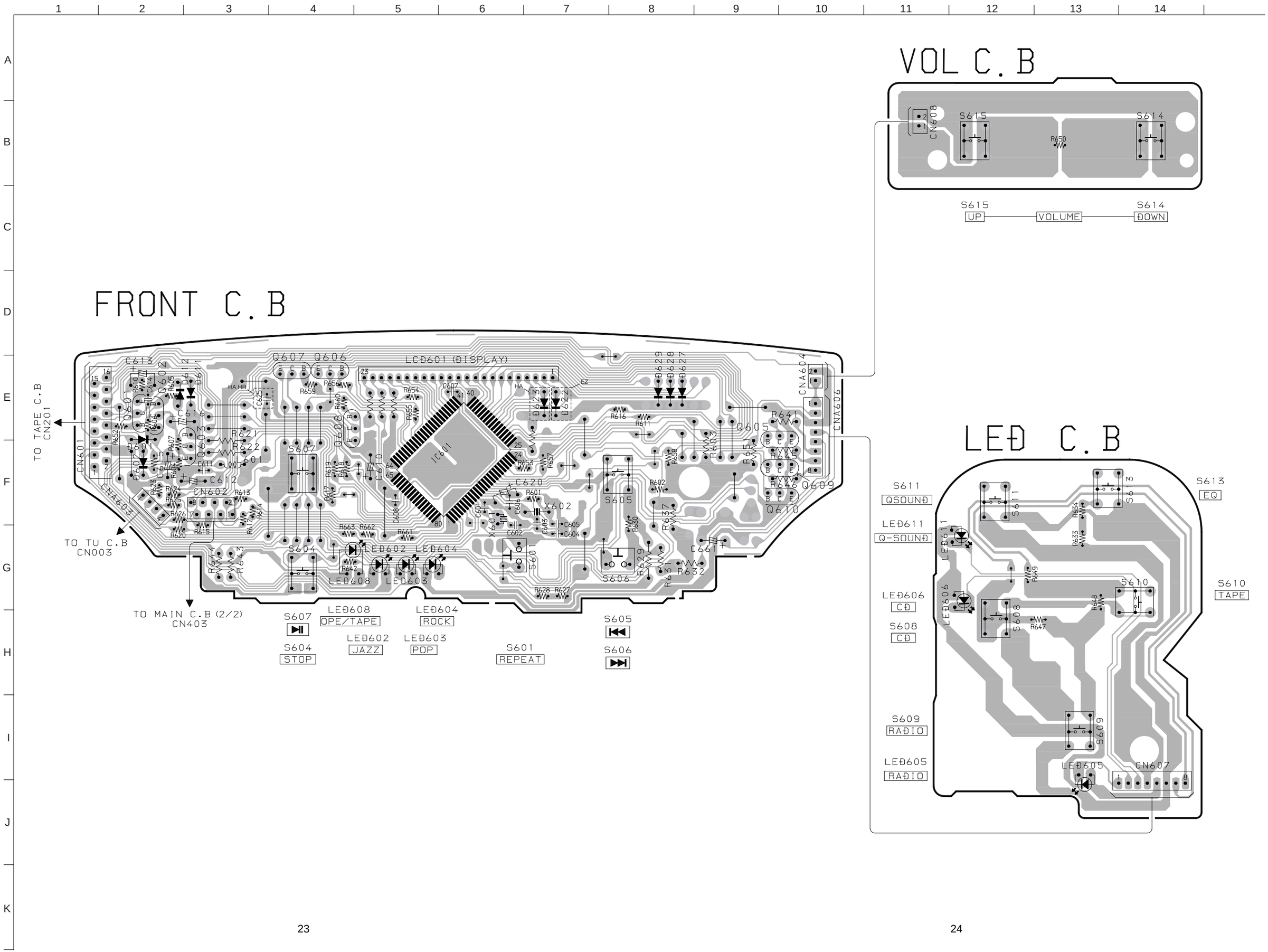

SCHEMATIC DIAGRAM-5 (FRONT)

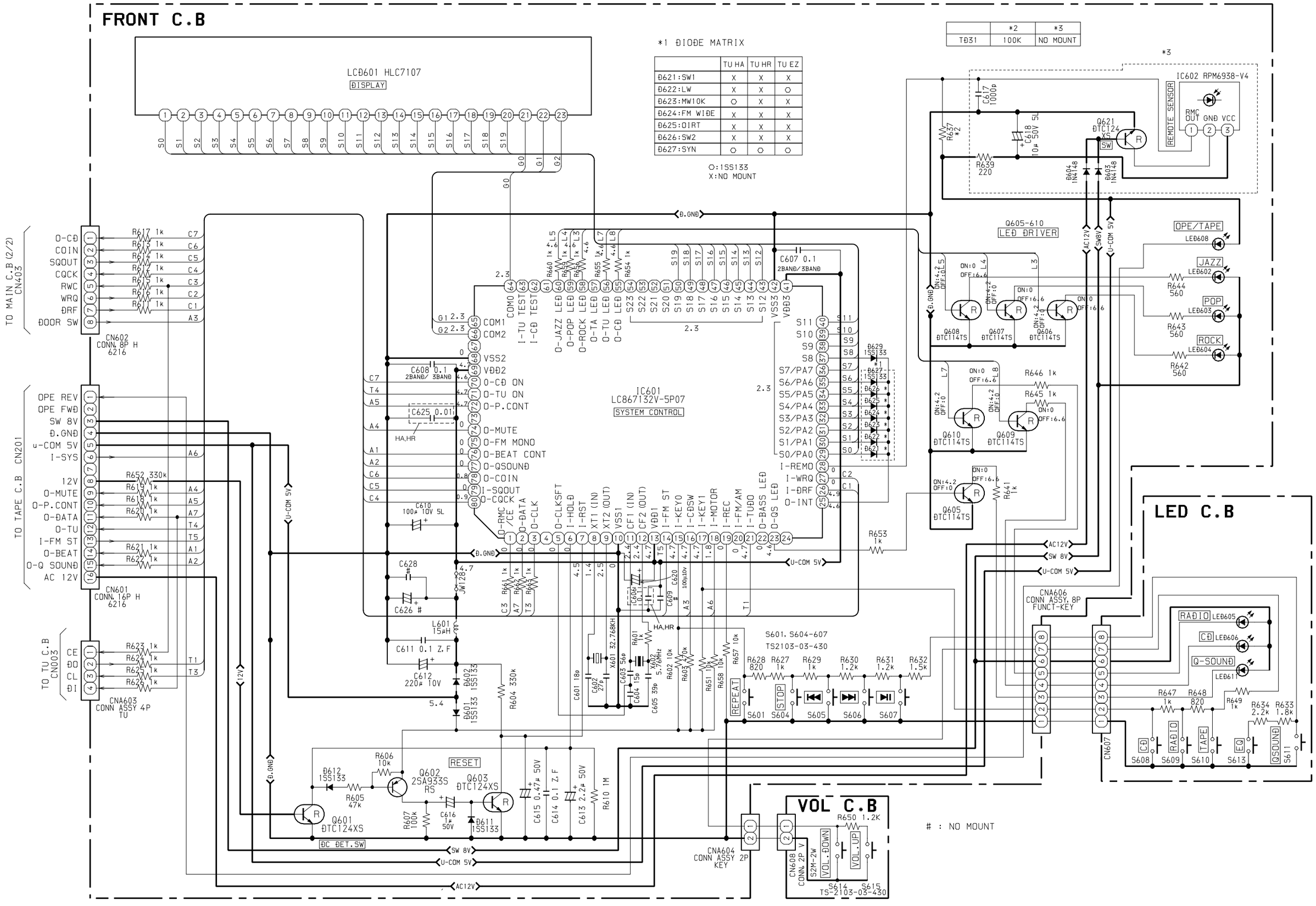

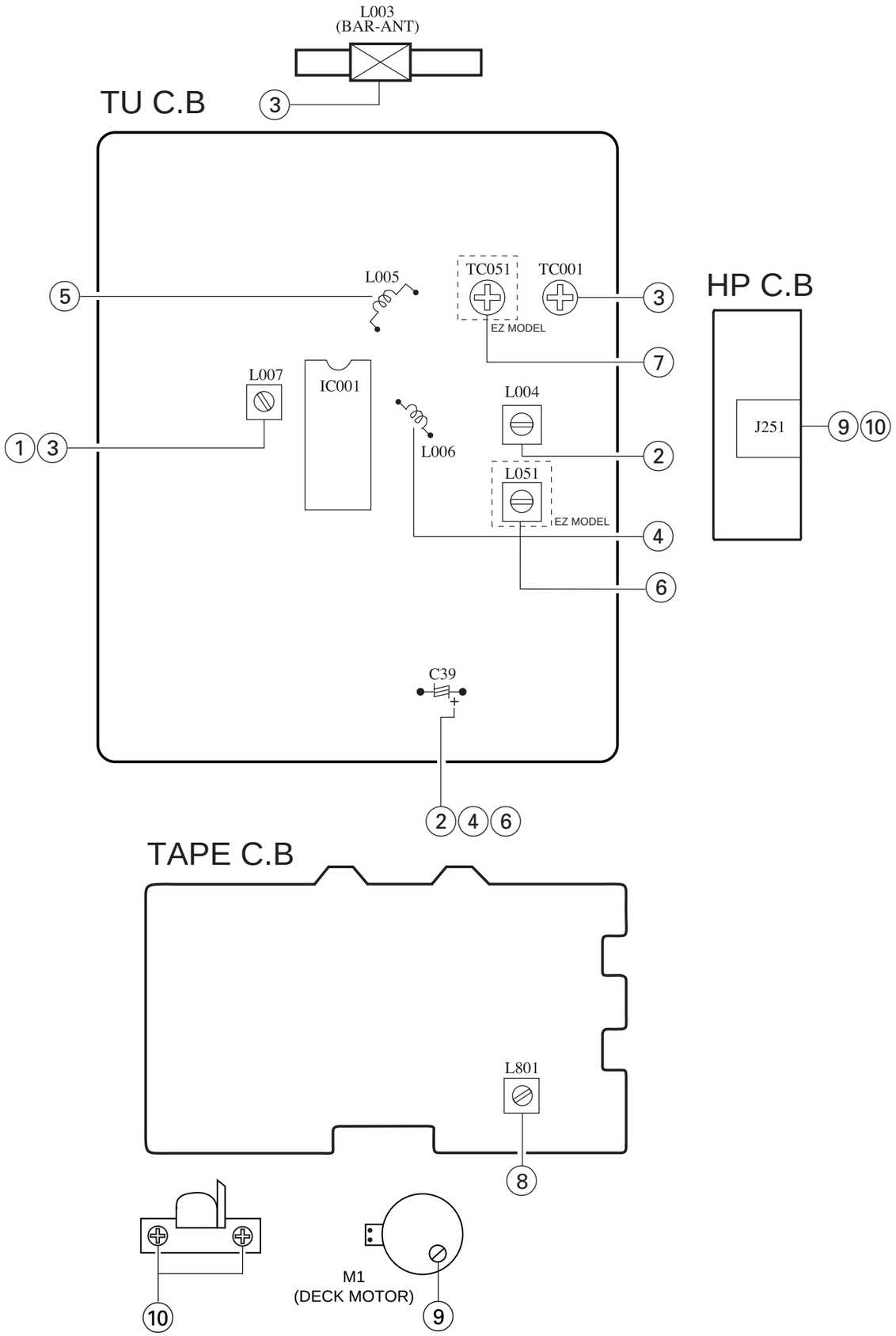

< TUNER SECTION >

(HA, HR MODEL)

1. AM IF Adjustment
   L007 ..... 450kHz

2. AM VT Adjustment
   Settings: • Test point: C39⊕
   • Adjustment location: L004
   (HA MODEL)
   Method: Set to AM 1000kHz adjust L004 so that the test point becomes 3.24 V±0.02V
   (HR MODEL)
   Method: Set to MW 999kHz adjust L004 so that the test point becomes 3.24 V±0.02V

3. AM Tracking Adjustment
   L003 ..... 600kHz
   TC001, L007 ..... 1400kHz

4. FM VT Adjustment
   Settings: • Test point: C39⊕
   • Adjustment location: L006
   Method: Set to FM 108MHz adjust L006 so that the test point becomes 6.0V±0.2V

5. FM Tracking Adjustment
   L005 ..... 98MHz

(EZ MODEL)

1. MW IF Adjustment
   L007 ..... 450kHz

2. MW VT Adjustment
   Settings: • Test point: C39⊕
   • Adjustment location: L004
   Method: Set to MW 999kHz adjust L004 so that the test point becomes 3.8V±0.02V

3. MW Tracking Adjustment
   L003 ..... 603kHz
   TC001, L007 ..... 1404kHz

4. FM VT Adjustment
   Settings: • Test point: C39⊕
   • Adjustment location: L006
   Method: Set to FM 108MHz adjust L006 so that the test point becomes 6.0V±0.2V

5. FM Tracking Adjustment
   L005 ..... 98MHz

6. LW VT Adjustment
   Settings: • Test point: C39⊕
   • Adjustment location: L051
   Method: Set to LW 288kHz adjust L051 so that the test point becomes 4.60V±0.02V

7. LW Tracking Adjustment
   L003 ..... 153kHz
   TC051 ..... 288kHz

< TAPE SECTION >

8. Bias frequency Adjustment
   L801 ..... 85Hz ±1kHz

9. Tape speed Adjustment
   Settings: • Test tape: TTA-100
   • Test point: PHONES JACK (J251)
   • Adjustment location: SFR of deck motor
   Method: Play back the test tape and adjust so that the output frequency is 3000Hz ±30Hz.

10. Azimuth Adjustment
    Settings: • Test tape: TTA-320
    • Test point: PHONES JACK (J251)
    • Adjustment location: Azimuth adjustment screw
    Method: Play back the test tape and adjust so that the output is maximum.

IC DESCRIPTION

IC, LA9241ML

Pin No.	Pin Name	I/O	Description
1	FIN2	I	Pin to which external pickup photo diode is connected. RF signal is created by adding with the FIN1 pin signal. FE signal is created by subtracting from the FIN1 pin signal.
2	FIN1	I	Pin to which external pickup photo diode is connected.
3	E	I	Pin to which external pickup photo diode is connected. TE signal is created by subtracting from the F pin signal.
4	F	I	Pin to which external pickup photo diode is connected.
5	TB	I	DC component of the TE signal is input.
6	TE–	I	Pin to which external resistor setting the TE signal gain is connected between the TE pin.
7	TE	O	TE signal output pin.
8	TESI	I	TES “Track Error Sense” comparator input pin. TE signal is passed through a band-pass filter then input.
9	SCI	I	Shock detection signal input pin.
10	TH	I	Tracking gain time constant setting pin.
11	TA	O	TA amplifier output pin.
12	TD–	I	Pin to which external tracking phase compensation constants are connected between the TD and VR pins.
13	TD	I	Tracking phase compensation setting pin.
14	JP	I	Tracking jump signal (kick pulse) amplitude setting pin.
15	TO	O	Tracking control signal output pin.
16	FD	O	Focusing control signal output pin.
17	FD–	I	Pin to which external focusing phase compensation constants are connected between the FD and FA pins.
18	FA	I	Pin to which external focusing phase compensation constants are connected between the FD– and FA– pins.
19	FA–	I	Pin to which external focusing phase compensation constants are connected between the FA and FE pins.
20	FE	O	FE signal output pin.
21	FE–	I	Pin to which external FE signal gain setting resistor is connected between the FE pin.
22	AGND	—	Analog signal GND.
23	SP	—	No connection.
24	SPI	O	Single ended output of the CV+ and CV– pin input signal.
25	SPG	I	Pin to which external spindle gain setting resistor in 12 cm mode is connected.
26	SP–	I	Pin to which external spindle phase compensation constants are connected together with SPD pin.
27	SPD	O	Spindle control signal output pin.
28	SLEQ	I	Pin to which external sled phase compensation constants are connected.
29	SLD	O	Sled control signal output pin.
30, 31	SL–, SL+	I	Sled advance signal input pin from microprocessor.
32, 33	JP–, JP+	I	Tracking jump signal input pin from DSP.
34	TGL	I	Tracking gain control signal input from DSP. Low gain when TGL = H.
35	TOFF	I	Tracking off control signal input pin from DSP. Off when TOFF = H.

Pin No.	Pin Name	I/O	Description
36	TES	O	Pin from which TES signal is output to DSP.
37	HFL	O	“High Frequency Level” is used to judge whether the main beam position is on top of bit or on top of mirror.
38	SLOF	I	Sled servo off control input pin.
39, 40	CV–, CV+	I	CLV error signal input pin from DSP.
41	RFSM	O	RF output pin.
42	RFS–	I	RF gain setting and EFM signal 3T compensation constant setting pin together with RFSM pin.
43	SLC	O	“Slice Level Control” is the output pin which controls the RF signal data slice level by DSP.
44	SLI	I	Input pin which control the data slice level by the DSP.
45	DGND	—	Digital system GND.
46	FSC	O	Output pin to which external focus search smoothing capacitor is connected.
47	TBC	I	“Tracking Balance Control” EF balance variable range setting pin.
48	NC	—	No connection.
49	DEF	O	Disc defect detector output pin.
50	CLK	I	Reference clock input pin. 4.23 MHz of the DSP is input.
51	CL	I	Microprocessor command clock input pin.
52	DAT	I	Microprocessor command data input pin.
53	CE	I	Microprocessor command chip enable input pin.
54	DRF	O	“Detect RF” RF level detector output.
55	FSS	I	“Focus Search Select” focus search mode (± search/+ search) select pin.
56	VCC2	—	Servo system and digital system Vcc pin.
57	REFI	—	Pin to which external bypass capacitor for reference voltage is connected.
58	VR	O	Reference voltage output pin.
59	LF2	I	Disc defect detector time constant setting pin.
60	PH1	I	Pin to which external capacitor for RF signal peak holding is connected.
61	BH1	I	Pin to which external capacitor for RF signal bottom holding is connected.
62	LDD	O	APC circuit output pin.
63	LDS	I	APC circuit input pin.
64	VCC1	—	RF system Vcc pin.

IC, LC78622ED

Pin No.	Pin Name	I/O	Description	
1	DEFI	I	Defect sense signal (DEF) input pin. (Connect to 0V when not used).	
2	TAI	I	For PLL.	Test signal input pin with built-in pull-down resistor. Be sure to connect to 0V.
3	PDO	O		Phase comparator output pin to control external VCO.
4	VVSS	—		GND pin for built-in VCO. Be sure to connect to 0V.
5	ISET	I		Pin to which external resistor adjusting the PD0 output current.
6	VVDD	—		Power supply pin for built-in VCO.
7	FR	I		Pin for VCO frequency range adjustment.
8	VSS	—	Digital system GND. Be sure to connect to 0V.	
9	EFMO	O	For slice level control.	EFM signal output pin.
10	EFMIN	I		EFM signal input pin.
11	T2	I	Test signal input pin with built-in pull-down resistor. Be sure to connect to 0V.	
12, 13	CLV+, CLK-	O	Disc motor control output. Three level output is possible using command.	
14	V/$\overline{P}$	O	Rough servo or phase control automatic selection monitoring output pin. Rough servo at H. Phase servo at L.	
15	HFL	I	Track detect signal input pin. Schmidt input.	
16	TES	I	Tracking error signal input pin. Schmidt input.	
17	TOFF	O	Tracking OFF output pin.	
18	TGL	O	Tracking gain selection output pin. Gain boost at L.	
19, 20	JP+, JP-	O	Track jump control signal output pin. Three level output is possible using command.	
21	PCK	O	EFM data playback clock monitoring pin 4.3218 MHz when phase is locked in.	
22	FSEQ	O	Sync signal detection output pin. H when the sync signal which is detected from EFM signal and thesync signal which is internally generated agree.	
23	VDD	—	Digital system power supply pin.	
24	SL+	O	Moves the sled to outer circumference.	
25	SL-	O	Moves the sled to inner circumference.	
26	—	—	Not connected.	
27	PUIN	I	CD pickup inner switch detection.	
28	RW	O	Read, wright signal.	
29	EMPH	O	De-emphasis monitor output pin. De-emphasis disc is being played back at H.	
30	C2F	O	C2 flag output pin.	
31	DOUT	O	DIGITAL OUT output pin. (EIAJ format).	
32, 33	T3, T4	I	Test signal input pin with built-in pull-down resistor. Be sure to connect to 0V.	
34	N.C.	—	Not used. Set the pin to open.	
35	MUTEL	O	L-channel 1-bit DAC.	L-channel mute output pin.
36	LVDD	—		L-channel power supply pin.
37	LCHO	O		L-channel output pin.
38	LVSS	—		L-channel GND. Be sure to connect to 0V.
39	RVSS	—	R-channel 1-bit DAC.	R-channel GND. Be sure to connect to 0V.
40	RCHO	O		R-channel output pin.
41	RVDD	—		R-channel power supply pin.
42	MUTER	O		R-channel mute output pin.

Pin No.	Pin Name	I/O	Description
43	XVDD	—	Crystal oscillator power supply pin.
44	XOUT	O	Pin to which external 16.9344 MHz crystal oscillator is connected.
45	XIN	I	
46	XVSS	—	Crystal oscillator GND pin. Be sure to connect to 0V.
47	SBSY	O	Subcode block sync signal output pin.
48	EFLG	O	C1, C2, single and dual correction monitoring pin.
49	PW	O	Subcode P, Q, R, S, T, U and W output pin.
50	SFSY	O	Subcode frame sync signal output pin. Falls down when subcode enters standby.
51	SBCK	I	Subcode read clock input pin. Schmidt input. (Be sure to connected to 0V when not in use.)
52	FSX	O	Pin outputting the 7.35 kHz sync signal which is generated by dividing frequency of crystal oscillator.
53	WRQ	O	Subcode Q output standby output pin.
54	RWC	I	Read/write control input pin. Schmidt input.
55	SQOUT	O	Subcode Q output pin.
56	COIN	I	Command input pin from microprocessor.
57	$\overline{\text{CQCK}}$	I	Command input read clock or subcode read input clock from SQOUT pin
58	RES	I	LC78622 reset input pin. Set this pin to L once when the main power is turned on.
59	T11	O	Test signal output pin. Use this pin as open (normally L output).
60	16M	O	16.9344 MHz output pin.
61	4.2M	O	4.2336 MHz output pin.
62	T5	I	Test signal input pin with built-in pull-down resistor. Be sure to connect to 0V.
63	$\overline{\text{CS}}$	I	Chip select signal input pin with built-in pull-down resistor. Be sure to connect to 0V while it is not controlling.
64	T1	I	Test signal input pin without built-in pull-down resistor. Be sure to connect to 0V.

IC, LC867132V-5P07

Pin No.	Pin Name	I/O	Description
1	O-RMC/CE	O	CD read/write control output.
2	O-DATA	O	Data output to sound processor IC (M62495FP).
3	O-CLK	O	Clock output to sound processor IC (M62495FP).
4	NC	—	Not Connected.
5	O-CLK SFT	O	Clock shift output of the microcomputer.
6	I-HOLD	I	Hold status detection.
7	I-RST	I	Microcomputer reset.
8	XT1 (IN)	I	Connected to 32.768kHz crystal oscillator.
9	XT2 (OUT)	O	
10	VSS1	—	GND.
11	CF1 (IN)	I	Connected to 5.76MHz Ceramic Filter.
12	CF2 (OUT)	O	
13	VDD1	—	Power supply for microcomputer (+5V).
14	I-FM ST	I	FM STEREO status input.
15	I-KEYO	I	KEY AD input.
16	I-CD SW	I	CD DOOR SW status detection input.
17	I-KEY1	I	KEY AD input.
18	I-MOTOR	I	DECK MECHA MOTOR status input.
19	I-REC	I	REC status input.
20	I-FM/AM (NC)	I	FM, AM status input. (Not connected)
21	I-TU DO	I	Data input from tuner PLL.
22	O-BASS LED (NC)	O	BASS LED ON/OFF control output. (Not connected)
23	O-QS LED	O	Q-Sound LED ON/OFF control output.
24	NC	—	Not connected.
25	O-INT	O	INT DIODE MATRIX detection output.
26	I-DRF	I	CD RF level detection input.
27	I-WRQ	I	CD sub-code Q standby input.
28	I-REMO	I	Remote control input.
29	SO/PAO (NC)	O	LCD segment output and initial settings output. (SW) (Not connected)
30	S1/PA1 (NC)	O	LCD segment output and initial settings output. (LW) (Not connected)
31	S2/PA2	O	LCD segment output and initial settings output. (MW 10K)
32	S3/PA3 (NC)	O	LCD segment output and initial settings output. (FM WIDE) (Not connected)
33	S4/PA4 (NC)	O	LCD segment output and initial settings output. (OIRT) (Not connected)
34	S5/PA5 (NC)	O	LCD segment output and initial settings output. (SW2) (Not connected)
35	S6/PA6	O	LCD segment output and initial settings output. (SYN)
36	S7/PA7	O	LCD segment output and initial settings output.
37-40	S8-S11	O	
41	VDD3	—	Power supply for microcomputer (+5V).
42	VSS3	—	GND.
43-50	S12-S19	O	LCD segment output.
51-54	S20-S23 (NC)	O	LCD segment output. (Not Connected)

Pin No.	Pin Name	I/O	Description
55	O-CD LED	O	LED ON/OFF control output for CD functions.
56	O-TU LED	O	LED ON/OFF control output for TU functions.
57	O-TA LED (NC)	O	LED ON/OFF control output for TAPE functions. (Not Connected)
58	O-ROCK LED	O	LED ON/OFF control output for ROCK.
59	O-POP LED	O	LED ON/OFF control output for POP.
60	O-JAZZ LED	O	LED ON/OFF control output for JAZZ.
61	NC	—	Not connected.
62	I-CD TEST (NC)	I	
63	I-TU TEST (NC)	I	
64-66	COM0-COM2	O	LCD common output.
67	NC	—	Not connected.
68	VSS2	—	GND.
69	VDD2	—	Power supply for microcomputer (+5V).
70	O-CD ON	O	CD PWR control output.
71	O-TU ON	O	TU PWR control output.
72	O-P.CONT	O	Power supply control output.
73	NC	—	Not connected
74	O-MUTE	O	Main mute output.
75	O-FM MONO (NC)	O	FM force control MONO output. (Not connected)
76	O-BEAT CONT	O	BEAT switch over output.
77	O-QSOUND	O	Q-Sound ON/OFF output.
78	O-COIN	O	CD command output.
79	I-SQOUT	I	CD sub-code Q input.
80	O-CQCK	O	CLK for CD commands/sub-codes.

MECHANICAL EXPLODED VIEW 1/1

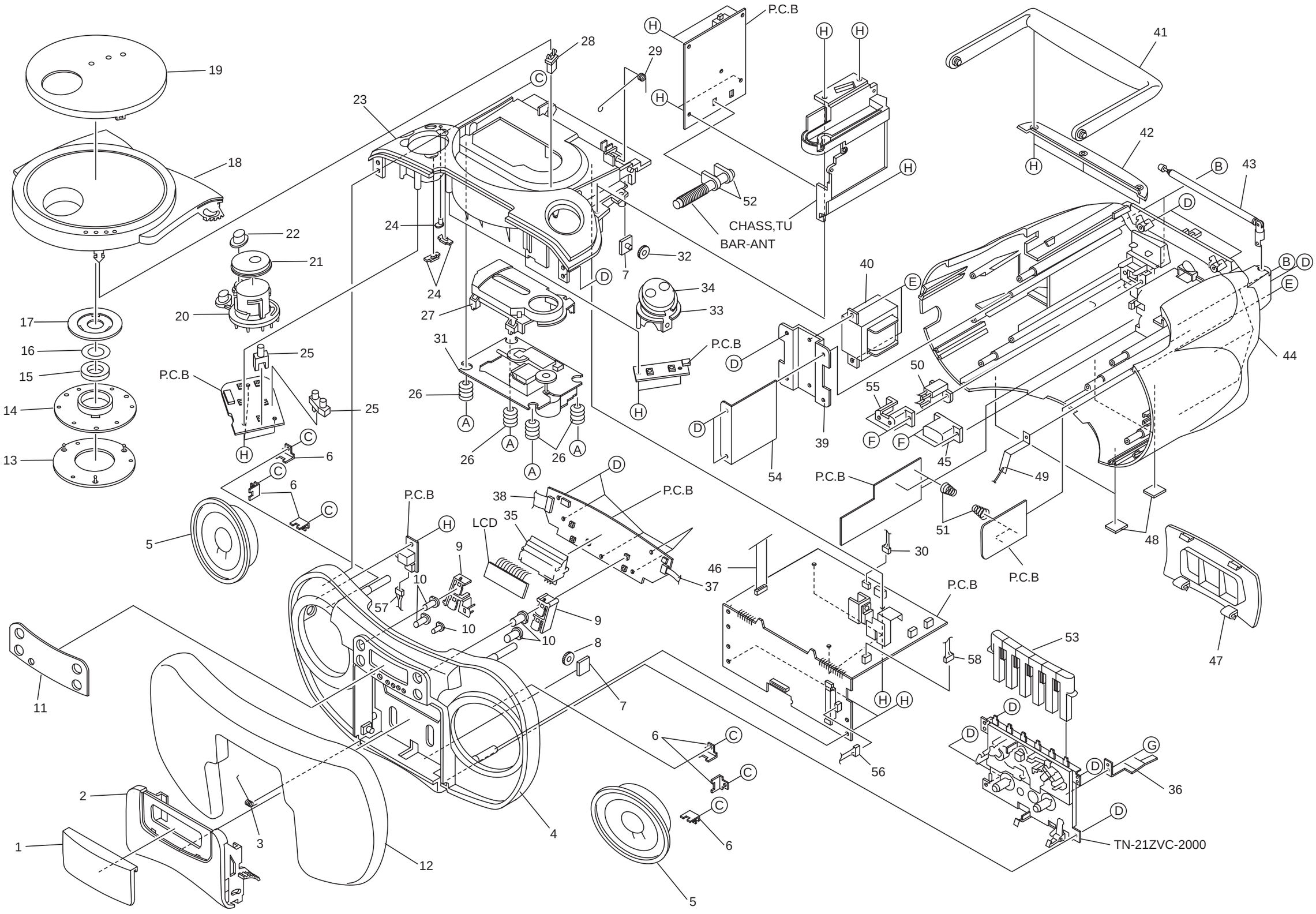

MECHANICAL PARTS LIST 1/1

DESCRIPTIONで判断できない物は "REFERENCE NAME LIST" を参照してください。
If can't understand for Description please kindly refer to "REFERENCE NAME LIST".

REF. NO	PART NO.	KANRI NO.	DESCRIPTION
1	8A-CDB-006-010		WINDOW,CASS<EXCEPT HRL>
1	8A-CDB-061-010		WINDOW,CASS BL<HRL>
2	8A-CDB-008-010		BOX,CASS<EXCEPT HRL>
2	8A-CHB-037-010		BOX,CASS BL<HRL>
3	8A-CDB-204-010		SPR-T,CASS
4	8A-CDB-001-010		CABI,FR
5	88-CD8-622-010		SPKR,F 77 7OHM 3W
6	8Z-CDB-208-010		HLDR,SPKR
8	87-063-164-010		OIL-DMPR 80
9	8A-CDB-206-010		BASE,CD
10	8A-CDB-016-010		BTN,CD
11	8A-CHB-047-010		WINDOW,DISP EX BL<HRL>
11	8A-CHB-013-010		WINDOW,DISPLAY<HAS>
11	8A-CHB-016-010		WINDOW,DISPLY<EZS,HRS>
12	8A-CDB-023-010		GRILLE,SPKR<EXCEPT HRL>
12	8A-CDB-067-010		GRILLE,SPKR BL<HRL>
13	8Z-CT6-213-010		BASE,CHUCK
14	8Z-CT6-214-010		RING,CHUCK
15	87-036-368-010		MAGNET
16	86-CT9-222-010		PLATE,MAGNET
17	86-CT9-217-010		HLDR,CHUCK A(S)
18	8A-CDB-009-010		BOX,CD<EXCEPT HRL>
18	8A-CDB-088-010		BOX,CD EX BL<HRL>
19	8A-CHB-011-010		WINDOW,CD<EXCEPT HRL>
19	8A-CDB-068-010		WINDOW,CD BL<HRL>
20	8A-CHB-014-010		BTN,FUNC<EXCEPT HRL>
20	8A-CHB-041-010		BTN,FUNC EX BL<HRL>
21	8A-CDB-213-010		BASE,FUNC
22	8A-CDB-014-010		BTN,QSOUND
23	8A-CDB-003-010		CHAS,CD
24	8A-CDB-021-010		LENS,FUNC
25	8A-CDB-203-010		HLDR,LED FUNC
26	88-CH6-220-010		CUSHION,CD A
27	8Z-CT9-064-010		PANEL CD
28	87-036-389-010		SW,PUSH LOCK
29	8A-CDB-218-010		SPR-T,CD
30	8A-CDB-620-010		CONN ASSY,2P CD-DOOR
31	M8-ZZK-E90-070		DA11T3C
32	87-063-165-010		OIL-DMPR 150
33	8A-CDB-214-010		BASE,VOL
34	8A-CDB-012-010		BTN,VOL<EXCEPT HRL>
34	8A-CDB-065-010		BTN,VOL BL<HRL>
35	8A-CHB-202-010		HLDR,LCD
36	8A-CDB-212-010		PLATE,REC
37	8A-CHB-619-010		FF-CABLE, 8P 1.25 CD-FR
38	8A-CHB-618-010		FF-CABLE, 16P 1.25 FR-MAIN
39	8A-CDB-219-010		HLDR,TRAN
⚠ 40	8A-CDB-653-010		PT,E 2.5W EI48X23<EZS>
⚠ 40	8A-CDB-651-010		PT,H 2.5W EI48X23<EXCEPT EZS>
41	8A-CDB-019-010		HANDL,GRIP
42	8A-CDB-018-010		COVER, HANDL
43	8Z-CH4-640-010		ANT,ROD
44	8A-CHB-001-010		CABI,REAR
⚠ 45	87-A91-369-010		SW,AC SL 2 2 2 SDKGA41700 <EXCEPT EZS>
46	8A-CDB-623-010		FF-CABLE, 16P 1.0 CD-RF
47	8A-CDB-020-010		LID,BATT
48	86-CT9-223-010		CUSH,FOOT
49	8A-CDB-207-010		HLDR,ANT
⚠ 50	87-A60-178-010		JACK,AC E W/SW
51	8A-CDB-215-010		SPR-T,BATT
52	8A-CDB-220-010		HLDR,M66 BAR ANT
53	8A-CDB-015-010		KEY,CASS
54	8A-CDB-216-010		PLATE,TRAN
55	87-A90-086-010		COVER,AC-SOCKET
56	8A-CDB-626-010		CONN ASSY,4P CASS HEAD
57	8A-CDB-633-010		CONN ASSY,4P SPKR
58	8A-CDB-625-010		CONN ASSY,4P CASS MECHA
A	81-CD5-204-010		SCREW CD
B	87-651-104-410		VT1+3-30
C	87-741-096-410		UT2+3-10
D	87-751-097-410		SCREW 3X12
E	87-261-096-410		SCREW,V+3-10 GLD
F	87-741-074-410		UT2+2.6-8
G	87-261-032-410		SCREW,V+2-3 GLD
H	87-751-095-410		VT2+3-8 W/O

COLOR NAME TABLE

Basic color symbol	Color	Basic color symbol	Color	Basic color symbol	Color
B	Black	C	Cream	D	Orange
G	Green	H	Gray	L	Blue
LT	Transparent Blue	N	Gold	P	Pink
R	Red	S	Silver	ST	Titan Silver
T	Brown	V	Violet	W	White
WT	Transparent White	Y	Yellow	YT	Transparent Yellow
LM	Metallic Blue	LL	Light Blue	GT	Transparent Green
LD	Dark Blue	DT	Transparent Orange		

TAPE MECHANISM EXPLODED VIEW 1/1

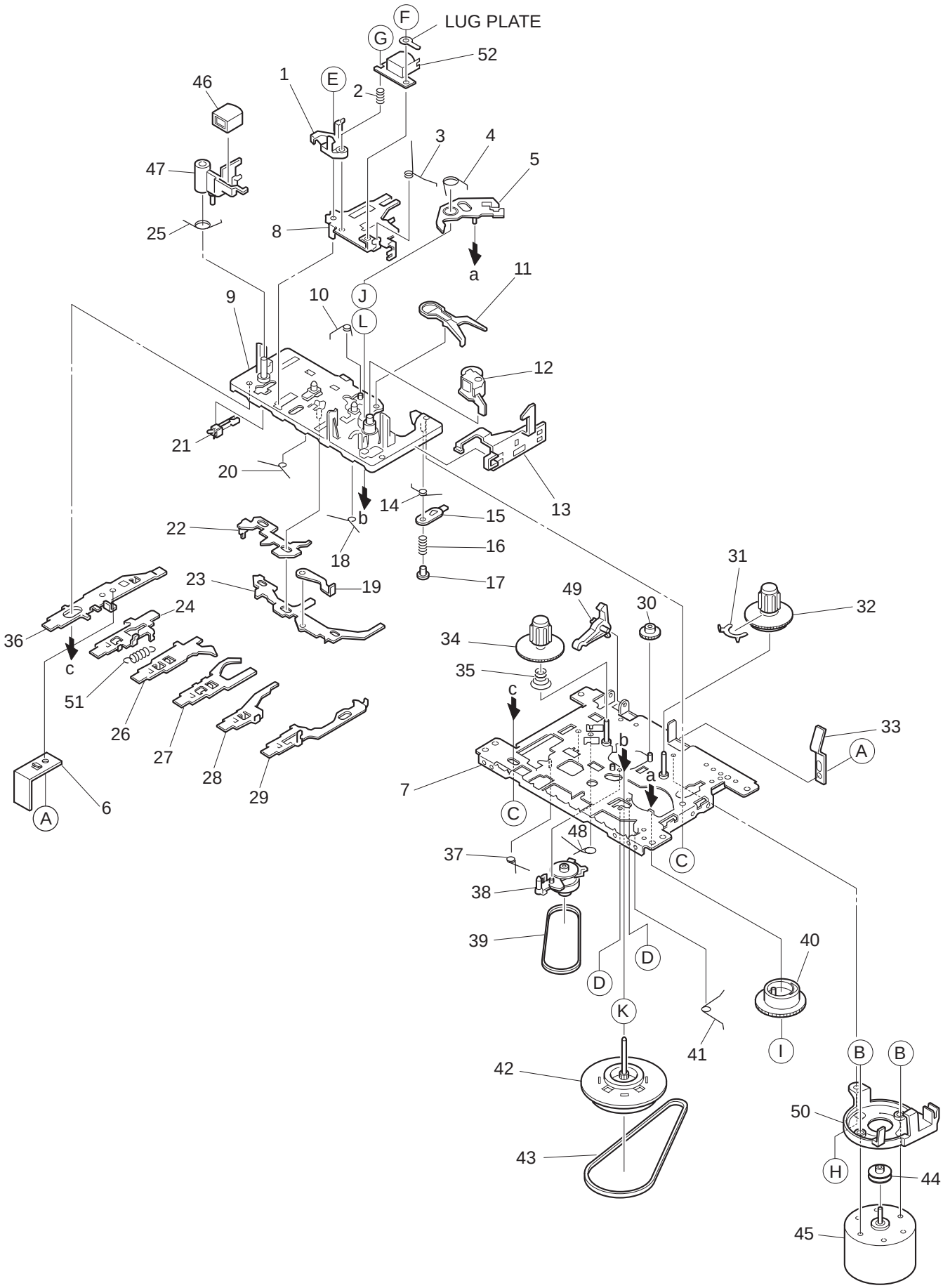

TAPE MECHANISM PARTS LIST 1/1

DESCRIPTIONで判断できない物は "REFERENCE NAME LIST" を参照してください。
If can't understand for Description please kindly refer to "REFERENCE NAME LIST".

REF. NO	PART NO.	KANRI NO.	DESCRIPTION
1	S1-921-030-4A0		HEAD BASE
2	S1-821-030-070		AZIMUTH SPRING
3	S1-921-030-090		PANEL P SPRING
4	S1-921-260-050		GEAR PLATE SPRING
5	S1-921-265-020		GEAR PLATE ASSY
6	S1-510-020-020		REC SPRING PLATE
7	S1-921-015-010		CHASSIS ASSY
8	S1-921-030-110		HEAD PANEL
9	S1-921-143-160		BASE ASSY
10	S1-921-141-8A0		M CONTROL SPRING
11	S1-921-260-4A0		SENSING LEVER
12	S1-921-043-100		PINCH ROLLER ARM ASSY
13	S1-921-130-010		EJECT SLIDE LEVER
14	S1-921-141-3A0		P CONTROL SPRING
15	S1-921-140-550		PAUSE LEVER(E)
16	S1-921-140-120		PAUSE LEVER SPRING
17	S1-921-140-110		PAUSE STOPPER
18	S1-921-140-150		BUTTON LEVER SPRING(B)
19	S1-821-011-590		E KICK LEVER
20	S1-921-141-070		BUTTON LEVER SPRING(A)
21	S6-401-011-490		LEAF SW MSW-1541T
22	S1-921-140-090		SWITCH ACTUATOR
23	S1-921-140-080		PUSH BUTTON ACTUATOR
24	S1-921-140-190		PLAY BUTTON LEVER
25	S1-921-030-100		MG ARM SPRING
26	S1-921-140-040		REW BUTTON LEVER
27	S1-921-140-050		FF,BUTTON REVER
28	S1-921-140-060		STOP BUTTON LEVER
29	S1-921-140-600		PAUSE BUTTON LEVER
30	S1-821-100-700		FF GEAR
31	S1-921-050-060		SENSER
32	S1-921-053-100		TAKE UP REEL ASSY
33	S1-829-100-010		PACK SPRING
34	S1-921-050-150		S REEL HUB
35	S1-921-050-220		BACK TENSION SPRING
36	S1-921-140-030		REC BUTTON LEVER
37	S1-921-140-170		P.S.LEVER SPRING
38	S1-921-073-040		RF CLUTCH ASSY
39	S1-921-070-030		RF BELT
40	S1-921-260-020		CAM GEAR
41	S1-921-140-160		E ACTUATOR SPRING
42	S1-921-093-210		FLYWHEEL ASSY
43	S1-921-090-380		MAIN BELT
44	S1-921-120-590		MOTOR PULLEY
45	S6-002-030-220		MOTOR EG530AD-2B
46	S6-209-100-100		E HEAD PH-K380-MS1
47	S1-921-030-050		MG ARM
48	S1-921-140-210		REC BUTTON LEVER SPRING
49	S1-821-100-690		RECORD SAFETY LEVER
50	S1-821-128-9A0		MOTOR BRACKET
51	S1-821-010-500		PLAY BUTTON LEVER SPRING
52	S6-201-011-110		HEAD,RP7442ES-0951
A	S9-P04-200-310		C TAPPING SCREW 2-3
B	S1-921-120-020		MOTOR COLLER SCREW
C	S9-B10-200-510		P TAPPING BIND SCREW M2-5
D	S9-C07-204-510		SCREW,TAPPING(CAMERA)M2-4.5
E	S9-P01-200-610		SCREW,M2-6
F	S9-B01-200-310		(+)BIND SCREW M2-3
G	S9-F08-200-710		AZIMUTH SCREW M2-7
H	S1-921-120-030		MB SCREW
I	S9-W02-300-100		P WASHER CUT 1.2-3.8-0.3
J	S9-W02-500-100		P WASHER CUT 1.45-3.8-0.5
K	S9-W01-400-100		P WASHER 2-3.5-0.4
L	S9-W01-130-200		P WASHER 2.1-4-0.13

CD MECHANISM EXPLODED VIEW 1/1

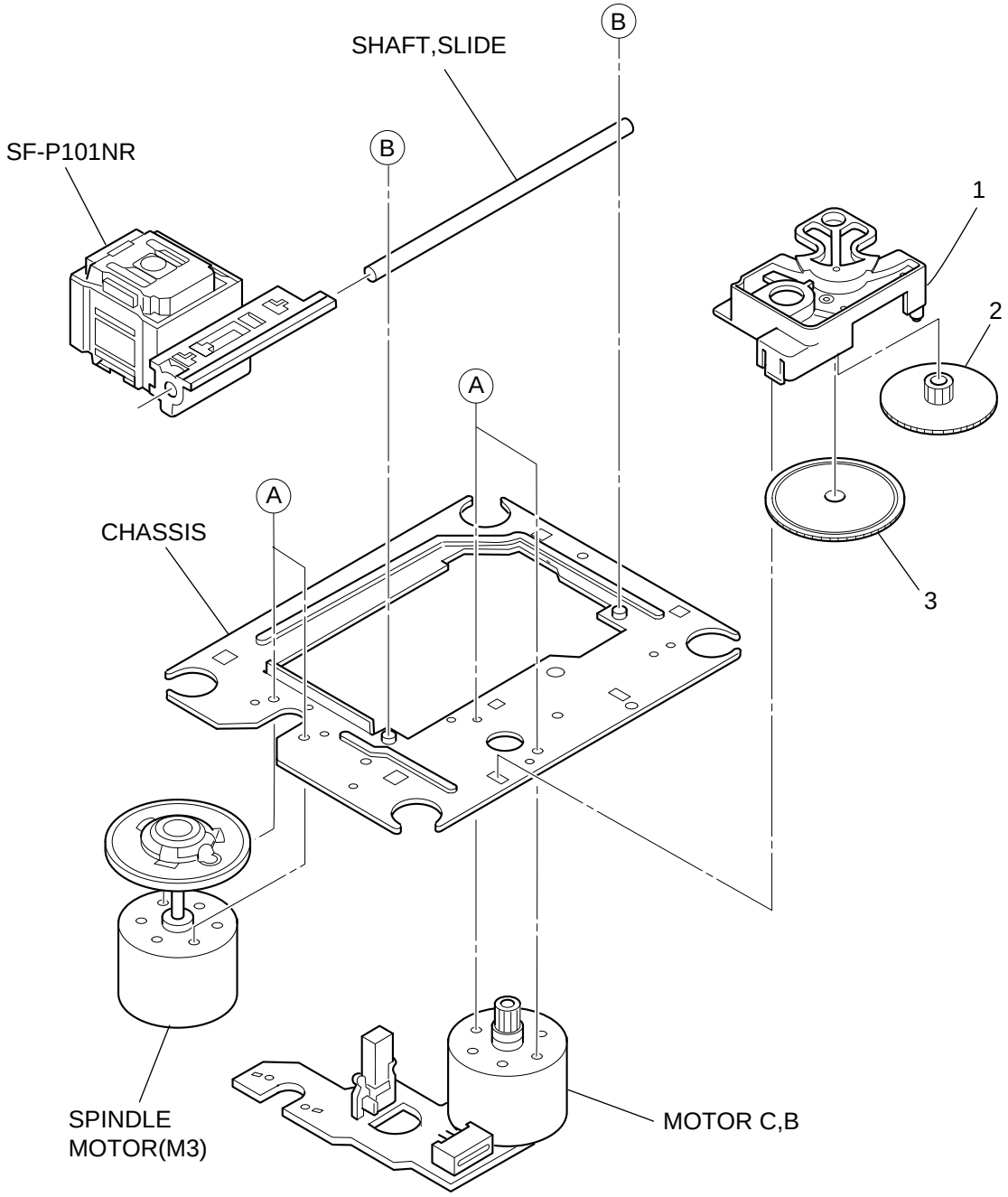

CD MECHANISM PARTS LIST 1/1

DESCRIPTIONで判断できない物は "REFERENCE NAME LIST" を参照してください。
If can't understand for Description please kindly refer to "REFERENCE NAME LIST".

REF. NO	PART NO.	KANRI NO.	DESCRIPTION
1	S2-121-A28-400		COVER GEAR
2	S2-511-A21-000		GEAR MIDDLE
3	S2-511-A21-100		GEAR,DRIVE
A	S1-PN2-03R-OSE		SCR PAN PCS 2-3
B	87-261-073-410		SCR S-TPG FLT 2.6-6
ALL	M8-ZZK-E90-070		DA11T3C

ACCESSORIES/PACKAGE LIST

DESCRIPTIONで判断できない物は "REFERENCE NAME LIST" を参照してください。
If can't understand for Description please kindly refer to "REFERENCE NAME LIST".

	REF. NO	PART NO.	KANRI NO.	DESCRIPTION
	1	8A-CHB-906-010		IB,EZ(9L)FM<EZS>
	1	8A-CHB-901-010		IB,H(ECA)FM<HRS,HRL>
	1	8A-CHB-902-010		IB,LH(ESP)FM<HAS>
⚠	2	87-A80-036-010		AC CORD SET ASSY,E W/FLTR VOL
⚠	3	87-A91-017-010		PLUG,CONVERSION JT-0476 <EXCEPT EZS>

アイワ株式会社
AIWA CO.,LTD.
〒110-8710 東京都台東区池之端1-2-11 ☎03(3827)3111 (代表)
2–11, IKENOHATA 1–CHOME, TAITO-KU, TOKYO 110-8710, JAPAN TEL:03 (3827) 3111

737004
Printed in Singapore